Bridge Bearings

Introduction

AASHTO defines a bearing as "a structural device that transmits loads while facilitating translation and/or rotation". [1] In the past Caltrans has used a variety of bearings with varying degrees of success. These include rockers, rollers, pins, pots, steel girder hangers, PTFE/elastomeric, and elastomeric pads. Of all the bearings mentioned, the reinforced elastomeric bearing (introduced in 1955) has been the most widely used the past four decades.

As design trends have shifted toward designs that favor structures with longer frames and fewer joints for seismic reasons, not to mention the widespread use of curved and skewed bridges, the demands on bearings have increased. Provisions must be made for large longitudinal displacements due to temperature, prestress shortening, shrinkage, creep and seismic activities, as well as rotations produced by changes in camber, live load, and misalignment of bearing seats due to construction tolerances. In short, Designers need a selection of bearing types to handle varying demands.

Increased demands on bearings have led to the development of "new" bearings (post World War II). Improvements in engineering materials, particularly plastics and elastomers are largely responsible for the innovative designs and refinements made in the past three decades. The three "new" bearing types most widely used today in the United States are pot, spherical and disk. Collectively, these bearings are known as High Load Multi-Rotational bearings. Of the three bearing systems mentioned, spherical bearings have the greatest rotation capacity and most trouble-free maintenance record. Pot bearings have been troublesome in the past and are still not considered trouble-free. Disk bearings on the other hand have fewer documented failures than pot bearings; however, up until 1992 they were a patented system made by a single manufacturer. In addition to the three bearings mentioned above, Caltrans has used PTFE/elastomeric bearings on several structures with large longitudinal displacements.

Supersedes Memo to Designers 7-1 dated November 1989

Bearing Selection

Bearing selection is influenced by many factors such as loads, geometry, maintenance, available clearance, displacement, rotation, deflection, availability, policy, designer preference, construction tolerances and cost. The designer must consider all the applicable variables early in the design stage and design the structure and bearing as a unified system. Too often bearings are selected at the last minute when forces and available space are fixed. Such an approach increases the chances of future maintenance problems.

The official policy of the Division of Structures is to avoid using an alternative bearing system where a conventional reinforced elastomeric pad can provide the required characteristics through shear deformation. When the practical limits of elastomeric bearing pads are exceeded, designers should consider using PTFE/spherical or PTFE/elastomeric bearings. The three bearing systems mentioned should provide enough versatility to satisfy the design requirements of most structures designed by the Division of Structures. Other bearing systems may be appropriate for special circumstances; designers should consult with the Bearing Technical Specialist for unique applications.

On widenings, designers are cautioned against mismatching bearing types. It has been common practice to use elastomeric bearing pads, a yielding bearing, to widen structures supported on steel rocker bearings, an unyielding bearing. While this practice has worked satisfactorily on short to moderate length structures, it has created problems when thick elastomeric bearing pads have been used on structures with long spans. [6]

Reinforced Elastomeric Bearing Pads

General

Reinforced elastomeric bearing pads, designed in accordance with *Bridge Design Specifications,* Section 14, should be considered the preferred type of bearing for all structures. The typical hinge or abutment configuration using many small elastomeric bearing pads has proved highly reliable and redundant. In addition, these bearings are extremely forgiving of loads and translations exceeding those considered in design.

Designing and Detailing Notes

The following data illustrates our current practice and provides practical information about elastomeric bearings. In addition, design examples and various charts in this memo provide background for the *Bridge Design Specification.*

Pad thickness is determined in increments of ½ inch. Minimum laminated pad thickness is one inch. Maximum laminated pad thickness is 6 inches at abutments and 4 inches at hinges. Plan dimensions (length, width) are determined in two inch increments. Maximum dimensions should not exceed 30 inches.

The minimum shape factor (S) for any reinforced bearing shall be 5.0. Unless shear deformation is prevented, the average compressive stress, δ_c, in any layer of any reinforced bearing with an $S \geq 5.0$ shall not exceed 800 psi. The minimum average compressive stress due to dead load will not be less than 200 psi. The Transportation Laboratory has found that as overall pad thickness increases, the compressive stiffness of the pad decreases although the shape factor is held constant. [3]

Rotational stresses may be minimized by specifying the smallest pad width possible within the limits of the application. Orient rectangular bearing pads so that the long side is parallel to the axis about which the largest rotation occurs (see Figure 1, page 9).

All pads at a hinge or abutment should be the same size, and oriented similarly. Ensure that the orientation is clearly detailed.

Bearing pads on skewed structures should be oriented parallel to the principal rotation axis (see Figure 1). When insufficient seat width exists, the bearing pads may be oriented normal to the support. The effects of skew and/or curvature must be considered. This may result in varying the pad spacing to accommodate the increased load at the obtuse corner. Minimum loads must be maintained to ensure that slippage (movement) of the bearing does not occur.

Slippage will be prevented by maintaining a minimum compressive force five times greater than the largest possible shear force under all service load conditions including live load plus impact.

The effects of prestress shortening, creep, shrinkage, and thermal movements will be included in bearing pad designs. The *Bridge Design Specifications* (Article 14.2.6) state that the shear deformation shall be taken as the maximum possible deformation caused by creep, shrinkage, post tensioning, and thermal effects unless a positive slip apparatus is installed.

Testing at the Transportation Laboratory with positive slip apparatuses have shown that prestress shortening may be partially accommodated by placing a greased galvanized sheet metal plate (sliding bearing) above the pad. The plate should extend a minimum of one inch in all directions beyond the calculated movement. (See Figure 2, page 10.) Long term tests have demonstrated that 50 percent of the total anticipated prestress shortening may be relieved by this sliding bearing without any significant shear deformation of the elastomeric bearing pad. The remaining prestress shortening, creep and shrinkage must be included in the bearing pad design. Note that prestress shortening may continue beyond the calculated long term shrinkage, particularly in the case of shallow structures with depth/span ratios less than 0.04.

The prestress shortening percentage (50 percent) used to design the bearing pad may be reduced at hinges that have delayed hinge closure pours when the sliding bearing detail is utilized. The reduction may be calculated by adding 20 weeks to the duration of the closure pour waiting period and determining a new shortening value from the prestress shortening curve (Attachment 1).

The designer needs to specify silicone grease on the plans when using the sliding bearing to differentiate it from the previously used multipurpose, automotive and industrial greases. Testing at the Transportation Laboratory has demonstrated that multipurpose petroleum base greases do not provide the desired sliding effect and may damage the elastomer because they are absorbed by the pad in a very short period of time.

Minimum edge distance to any vertical face (backwall, face of abutment or hinge seat) should be equal to "*t*" (pad design thickness), or 3 inches, whichever is greater. For cast-in-place structures, surround the bearing pads with polystyrene of the same thickness as the actual pad thickness. (See Figure 3, page 10.)

Plain pads are acceptable during stage construction of precast prestressed girder superstructures that are continuous for live load where in the final condition the bent cap becomes monolithic with the girders and slab.

Steel reinforced and fabric reinforced pads have different design criteria. Where possible, the designer should prepare both designs (with one set of details) and allow the contractor the choice as specified in Section 51-1.12H of the *Standard Specifications*. The following is an example of a note that should be shown on the plans:

> "Fabric reinforced elastomeric bearing pads 22" × 28" × 2" or steel reinforced elastomeric bearing pads 20" × 26" × 2" (elastomer only)."

In most cases the designer need not be aware of the increase in thickness due to the steel reinforcing, since the design thickness relates to the thickness of elastomer, and changes due to the actual thickness are taken care of in the specifications and during construction. Exceptions may include retrofit projects where the actual thickness should be shown on the plans. In these cases a substitution would not be allowed, and the plans should state this clearly.

Properties of Elastomer

Durometer Hardness ..... 55 ±5*

Creep in Compression ..... 25% of initial vertical deflection

Shear Modulus (Adjusted)

@	70°F		= 135 psi
@	20°F	1.10 × 135	= 149 psi
@	0°F	1.25 × 135	= 169 psi
@	–20°F	1.90 × 135	= 257 psi

"Shear modulus *(G)*, is the most important material property for design, and it is, therefore, the preferred means of specifying the elastomer. Hardness has been widely used in the past because the test for it is quick and simple. However, the results obtained from it are variable and correlate only loosely with shear modulus." [1]

The shear modulus of elastomer, obtained from testing, is approximately 100 psi at 70°F. [3] The design value was increased to 135 psi at 70°F to include a safety factor of 35 percent against horizontal overloads. For design calculations use the modulus at 0°F, (169 psi), unless temperatures will be substantially lower.

* Railroads require 60 ±5 hardness on their structures. Specifications handles the change and there is no change in design.

Elastomer properties are in accordance with the Research Report, "A Laboratory Evaluation of Full Size Elastomeric Bridge Bearing Pads," dated June, 1974, by the Transportation Laboratory of the State of California, except as noted.

Design Criteria

1. Temperature movement shall be calculated as per the examples in this memorandum. In calculating movement, use 1½ times the coefficients, as it is not possible to always place the pad at a "mean" temperature. Rise and fall temperature values are given in the *Bridge Design Specifications,* Article 3.16.

2. Long term prestress shortening and shrinkage shall be included in the bearing movement calculation. Prestress shortening per 100 feet of contributory length will equal 0.10 feet for post tensioned concrete structures, and a minimum of 0.01 feet for pretensioned concrete structures. Shortening (shrinkage) of conventional reinforced concrete structures will equal a minimum of 0.005 feet per 100 feet of contributory length. Fifty percent of the prestress shortening may be discounted when the sliding bearing is used. (See Figure 2, page 10.)

3. Pad thickness shall not exceed ⅓ of the length or width, or be less than twice the calculated horizontal movement. Maximum thickness for plain pads is ½ inch. Maximum thickness for laminated pads is 6 inches at abutments and 4 inches at hinges. Minimum thickness for laminated pads is 1 inch (two ½-inch layers). When design procedures require a pad thickness greater than the maximum recommended thickness, investigate the use of PTFE bearings.

4. Average pressure on the pad shall not exceed 800 psi under a service load combination of dead load plus live load not including impact. For steel reinforced bearing pads with a Shape Factor ≥ 7.5, the average pressure shall not exceed 1,000 psi. Minimum pressure on any pad due to dead load shall not be less than 200 psi.

5. Initial vertical deflection (compressive strain) shall not exceed 7 percent (excluding the effect of rotation) of the uncompressed thickness of the pad.

   Determine the initial compressive strain from Figure 4A or 4B (page 11 and 12), "Compressive Strain, Percentage", using the compressive stress and shape factor.

Note:

$$\text{Shape Factor} = \frac{\text{one loaded surface area}}{\text{total free - to - bulge area}}$$

$$= \frac{W \times L}{2(W+L)\times(\text{thickness per layer})}$$

Where

L = length of bearing pad in direction of horizontal movement;
W = width of bearing pad normal to direction of horizontal movement.

For laminated pads, since the thickness per layer is always ½", the formula reduces to:

$$\text{Shape Factor} = \frac{WL}{W+L}$$

6. If some combination of service loads (including live load plus impact) exists which causes a shear force greater than ⅕ of the simultaneously occurring compressive force, the bearing should be secured against horizontal movement.

   No experimental determination has been made of the starting friction between bearing pad and concrete or steel. But it has been observed in laboratory tests on full size pads that slippage does not occur so long as the shear stress does not exceed ⅕ the compressive stress acting on the interfaces. Therefore, the shear force in bearing pad designs should be limited to ⅕ the minimum vertical load, (usually Dead Load).

Elastomeric Bearing Pad Coefficient of Friction for Seismic Analysis

Seismic analysis of existing structures with elastomeric bearing pads often requires a determination of the friction coefficient between the bearing pad and concrete substructure.

Bearings on new structures are normally designed to resist slippage by limiting the shear force to 1/5 the minimum compressive stress acting on the neoprene/concrete interface, i.e., coefficient of friction equals 0.20. This value is conservative and ensures that bearings do not creep out of position under service load conditions. However, the value is unconservatively low for seismic analysis and should not be used to determine substructure forces.

Friction determination is an inexact science dependent on many variables which are not easily quantified by the Bridge Engineer. Therefore, a conservative/reasonable value must be used to ensure that substructure forces are not underestimated. A review of several test reports indicates that friction coefficients equal to 0.40 for concrete to neoprene and 0.35 for steel to neoprene interfaces are more realistic values for seismic analysis.

Designers should also investigate the maximum force exerted by the bearing pad through shear translation, prior to slippage, and determine which case controls. It is estimated that elastomeric bearing pads will resist a maximum shear strain of ±150 percent prior to failure. Laboratory tests reviewed show negligible damage to elastomeric bearings translated ±100 percent of their design thickness (±100 percent shear strain).

Equations

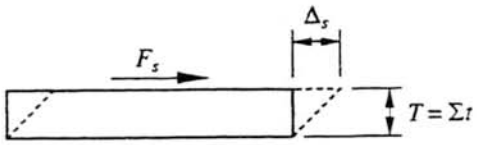

Pad Area $A = L \times W$

By Definition:

$$\text{Shear Modulus} = \frac{\text{Stress}}{\text{Strain}} = \frac{\dfrac{\text{Shear Force}}{\text{Pad Area}}}{\dfrac{\text{Deflection}}{\text{Pad Thickness}}}$$

$$G = \frac{\dfrac{F_s}{A}}{\dfrac{\Delta_s}{T}} = \frac{F_s T}{A \Delta_s}$$

Rearranging terms, $\Delta_s = \dfrac{F_s T}{GA}$ and $F_s = \dfrac{GA\Delta_s}{T}$

Substituting $G = 169$ psi @ 0°F and $F_{s\,\max} = \frac{1}{5}\,DL$

$$F_s = \frac{169 \times A \times \Delta_s}{T} \le F_{s\,\max}$$

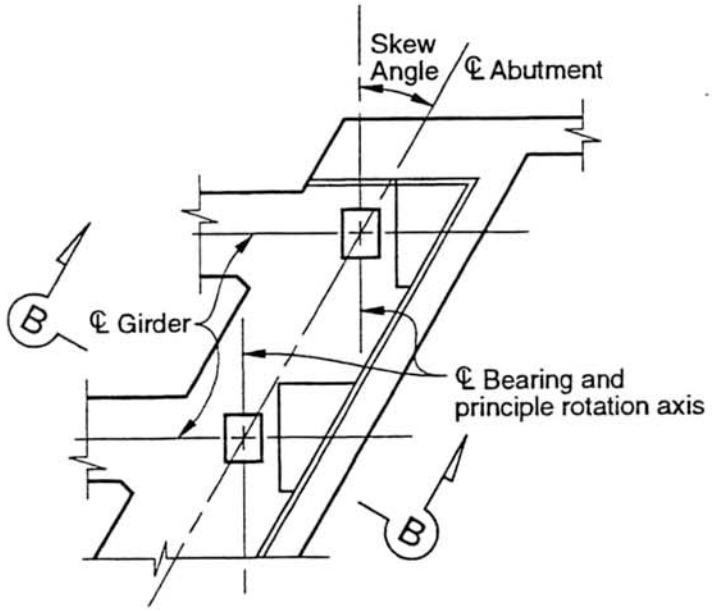

Plan
Pad at Centerline of Girder

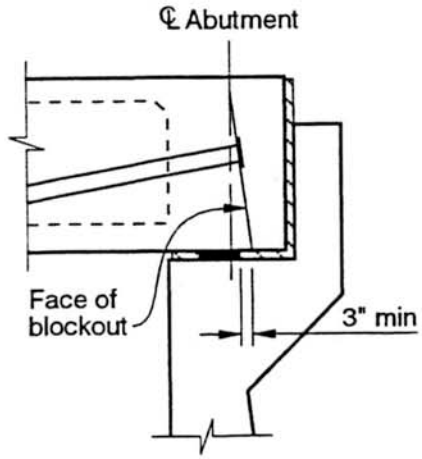

Section B-B

Figure 1. Bearing Pad Orientation

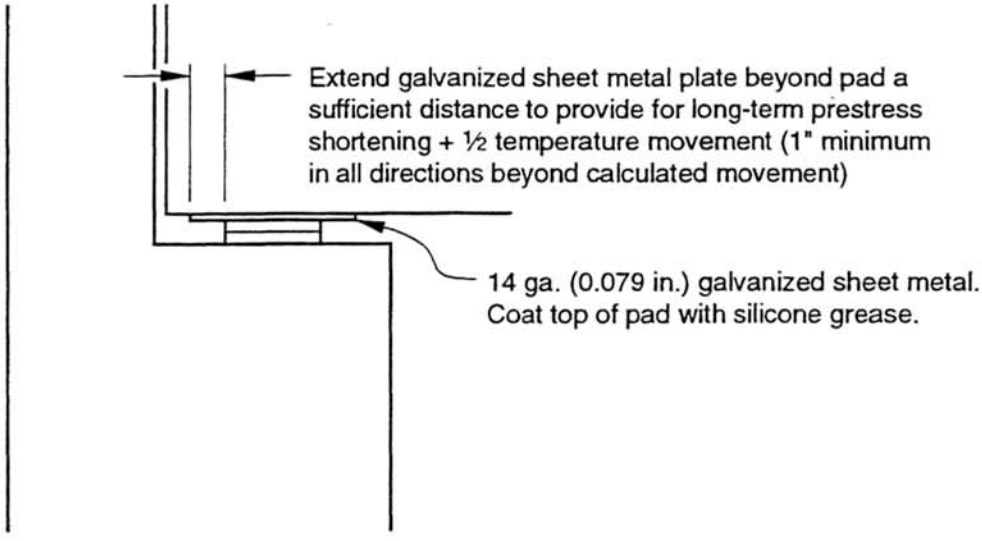

Figure 2. Sliding Bearing Detail

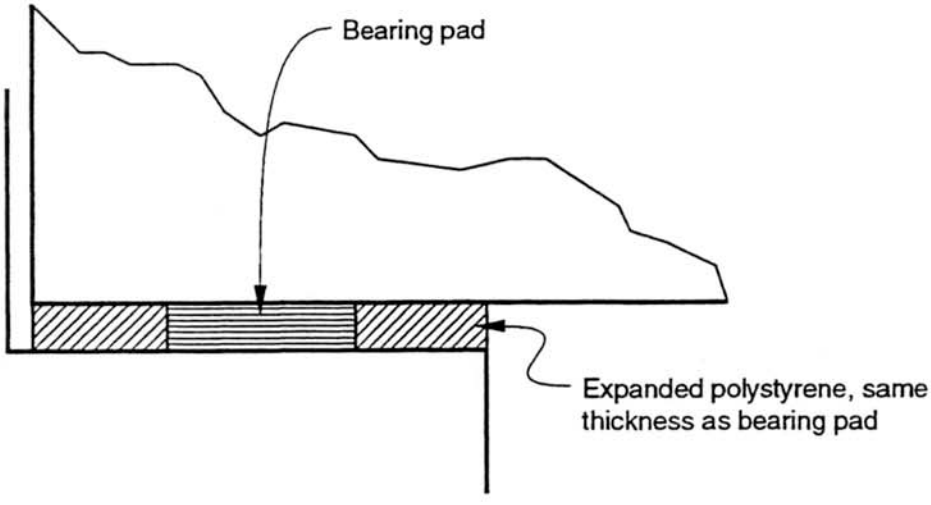

Figure 3. Detail

Note: Abutment shown – hinges similar.

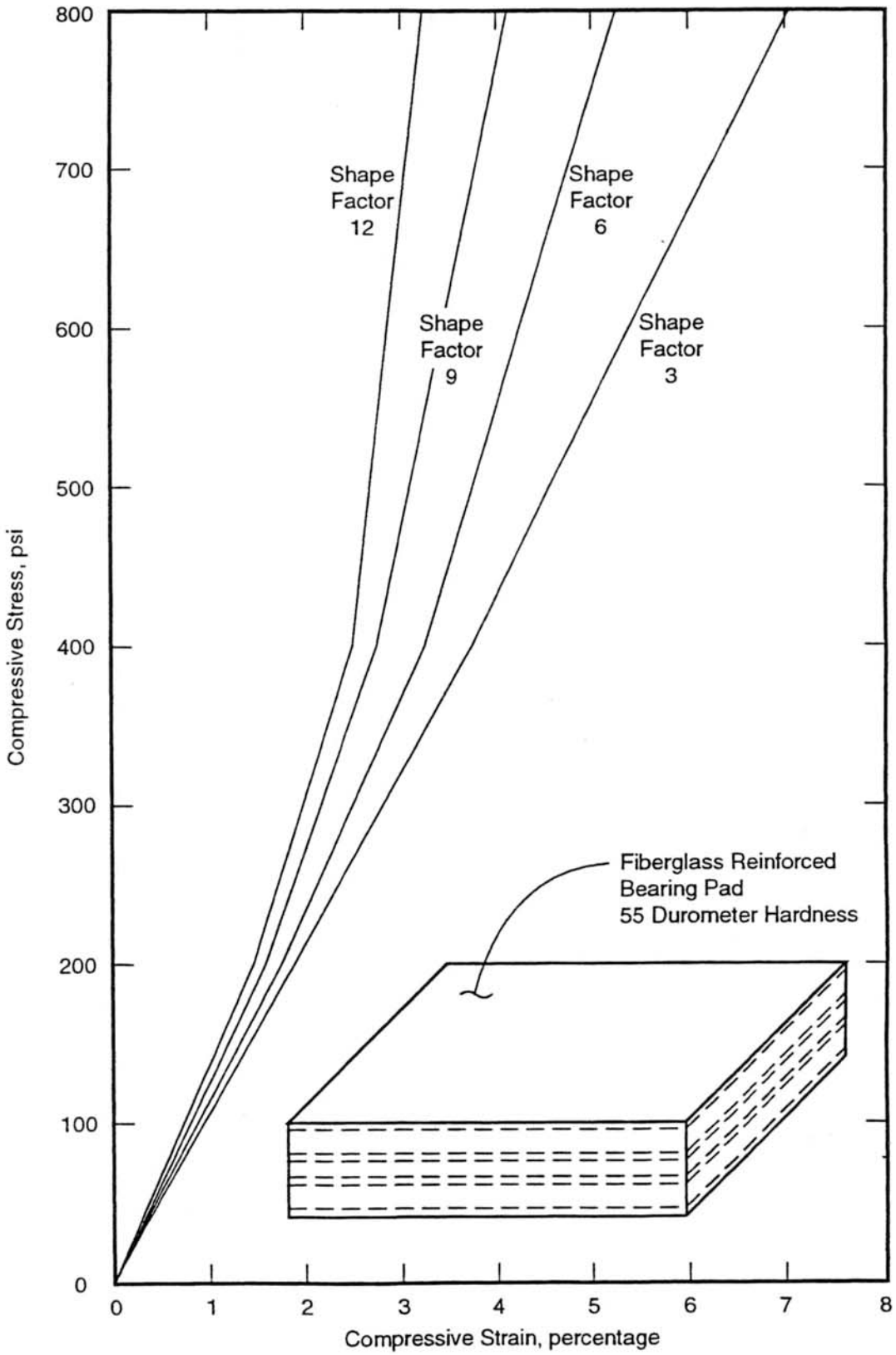

Figure 4A. Recommended Compressive Stress vs. Strain Curve for Fiberglass Reinforced Bearing Pads

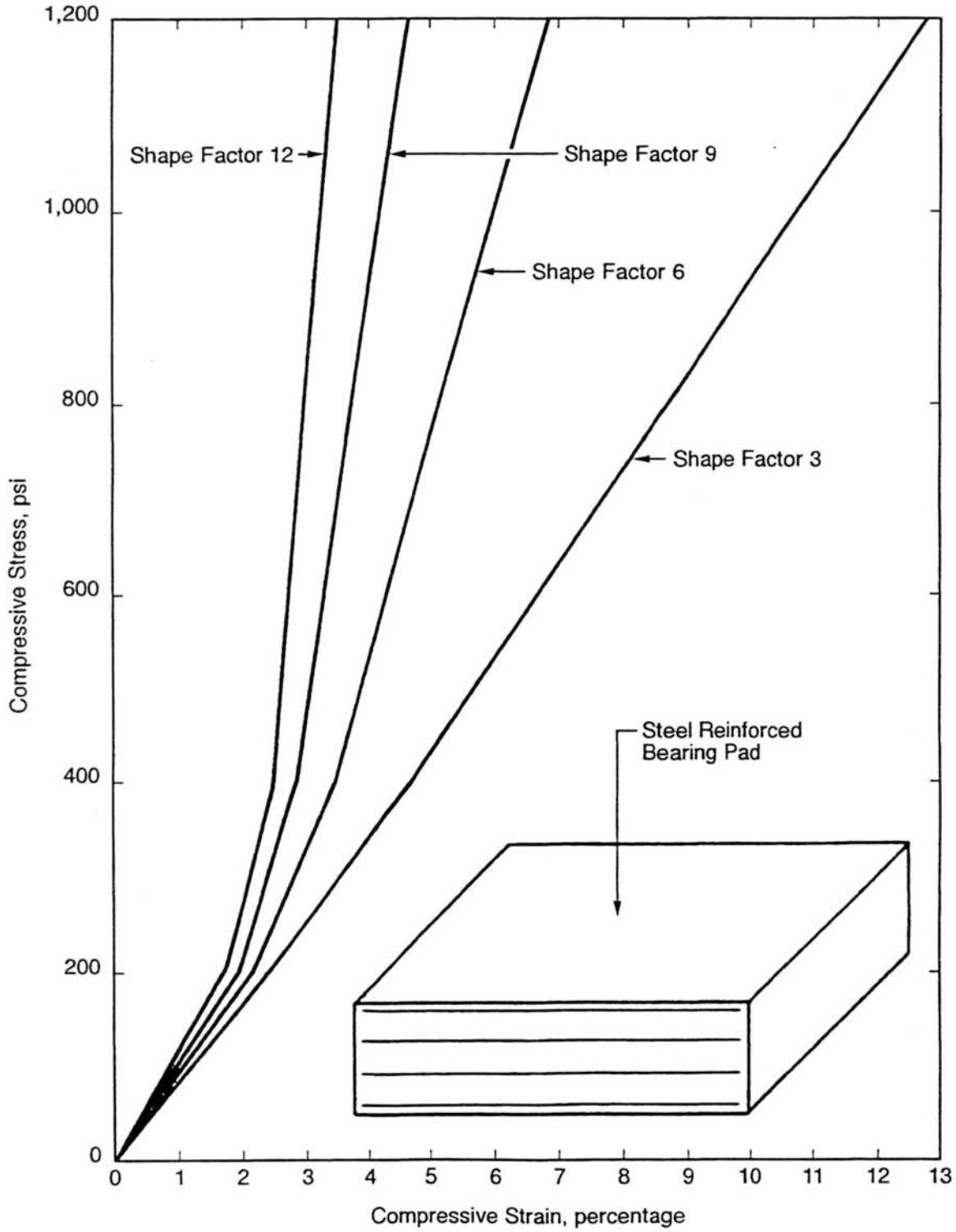

Figure 4B. Recommended Compressive Stress vs. Strain Curves for Steel Reinforced Bearing Pads

Design Procedures

Example 1. Fabric Reinforced Pad, Steel Girder Structure

Given:

Span Length – one end fixed	= 112 feet
Contributory Length – structural steel	= 112 feet
DL Reaction – Service Load	= 69 kips
LL Reaction – Service Load	= 56 kips
Bottom Flange Width	= 16 inches
Moderate Temperature Zone – Rise and Fall	= 50°F.

Step 1. Temperature Movement = $1.5 \times 0.0000065 \times 50° \times 112 \times 12 = 0.66"$

Step 2. Concrete Shortening—Not Applicable (Steel Girder)

Step 3. Minimum Thickness of Pad = 2 × horizontal movement = $2 \times 0.66 = 1.32"$.
Try $T = 1.5"$.

W = flange width = 16"

$$\text{Maximum Pressure} = \frac{DL + LL}{W \times L} = 800 \text{ psi}$$

$$L = \frac{DL + LL}{0.8 \times W} = \frac{125}{0.8 \times 16} = 9.8 \text{ minimum. Use } 10".$$

Trial Pad: 10" × 16" × 1.5"

$$\text{Maximum Thickness of Pad: } \tfrac{1}{3} \text{ of length} = \frac{10}{3} = 3.33" > 1.5"$$

$T = 1.5"$ Okay

Step 4. Compressive Stress

$$\frac{DL + LL}{W \times L} = \frac{125{,}000}{16 \times 10} = 781 \text{ psi} < 800$$

Compressive Stress (Dead Load Only)

$$\frac{DL}{W \times L} = \frac{69{,}000}{16 \times 10} = 431 \text{ psi} > 200$$

Step 5. Initial Vertical Deflection

$$\text{Shape Factor} = \frac{W \times L}{W + L} = \frac{16 \times 10}{(16 + 10)} = 6.15 > 5.0$$

From Figure 4A, for compressive stress = 781 psi and Shape Factor = 6.1, initial compressive strain is 5.1 percent of pad thickness < 7 percent (by extrapolation).

Initial Thickness = $1.50 - (1.5 \times 0.051) = 1.42"$.

Final Thickness after creep = $1.42 - (1.5 \times 0.051) \times 0.25 = 1.40"$.

Step 6. Calculate the maximum shear force at slippage (minimum compressive force = DL in this example).

$$F_{s\max} = \frac{DL}{5} = \frac{69}{5} = 13.8 \text{ kips}$$

$$\text{Actual Design Shear Force } F_s = \frac{GA\Delta_s}{T} =$$

$$\frac{\text{Modulus} \times \text{Area} \times \text{Movement}}{\text{Pad Thickness} \times 1{,}000} = \frac{169 \times 160 \times 0.66}{1.5 \times 1{,}000} = 11.9 \text{ kips}$$

11.9 kips < 13.8 kips

Therefore $T = 1\frac{1}{2}"$ Okay.

Specify "Fabric Reinforced Elastomeric Bearing Pads 10" × 16" × 1.5"."

To reduce rotational (compressive) stresses, orient rectangular bearing pads so that the long side is parallel to the axis about which the largest rotation occurs.

To complete the design, repeat steps 3 through 6 using the design criteria for steel reinforced pads (if applicable) and include this design on the contract plans.

Steel Laminated Elastomeric Bearing Pads

Background

Our policy has been to standardize on ½" layers of elastomer. Until recently, we used very thin steel plates and a minimal elastomer cover at the top and bottom for the steel reinforced pads. The minimal thickness of cover and of steel was ignored and the bearing thickness shown on the plans was the sum of the ½-inch thick layers. This resulted in a simple, standard Caltrans procedure for the design and manufacture of both the fabric reinforced and steel reinforced bearing pads.

Steel reinforcement option was removed from the *1981 Standard Specifications* because the bearing manufactures could not properly mold the bearing with the thin steel plates.

Current Policy

The current specifications for elastomeric bearings permit the use of the steel reinforced bearing as an option. However, the proper design of the steel reinforced bearings requires 14 gauge (0.075 inch) steel plates full ½-inch elastomer layers between the plates and a ¼-inch cover top and bottom. These two ¼-inch layers are considered one ½-inch layer for design purposes. Therefore, because of the steel plate thickness, the steel reinforced bearing will always be slightly thicker than the corresponding fabric reinforced (fiberglass) bearing pad.

Design

In permitting the use of the steel reinforced bearing as an option, the specifications require that the contractor notify the Resident Engineer of their choice. If the steel reinforced bearing is selected, the bearing seat elevation will be adjusted (lowered) by the Resident Engineer to allow for the increased thickness. The minor increase in compression on the steel plates due to the ⅛" side cover may be ignored.

For most cast-in-place concrete, precast concrete and steel superstructures, there should be no difficulty in adjusting the bearing seat elevation at the time the contractor selects the bearing type. In general there is no need for the designer to be concerned with the choice.

For some applications, the designer may want to limit the bearings to only one of the two types. If this is the case, the designer should send a memo to the specification writer who will denote the specific type of pad in the *Standard Special Provisions*.

"The maximum size of steel reinforced bearings is governed by the fabricators ability to vulcanize a large volume of elastomer uniformly and completely". [4] Since elastomers are poor conductors of heat, achieving a full cure in the center of the bearing without overcuring the outside becomes increasingly difficult as the bearing size increases. [4] Steel reinforced elastomeric bearings should be limited in size to approximately 500 kips based on an allowable stress of 1,000 psi to ensure proper vulcanization of the elastomer.

The new LRFD Bridge Design Specifications will allow a maximum allowable compressive stress of up to 1,600 psi in the absence of rotation (service limit). To utilize the higher stress limits, the designer will have to use a more complex design procedure and specify more rigorous testing. The current *Bridge Design Specifications* allow alternative design procedures as outlined in NCHRP Report 298.

The various modes of failure for steel reinforced pads are: debonding, fracture of steel plates and instability. [4]

Steel reinforced bearings have a greater overload capacity before failure than fabric reinforced pads. The Transportation Laboratory reported that the ultimate compressive stress of steel reinforced pads was approximately 6,000 psi before the 14 gage steel yielded. In comparison, the ultimate compressive stress of fabric reinforced pads was approximately 1,800 psi. [2] Therefore, steel reinforced elastomeric bearings provide a greater factor of safety against overloads than do fabric reinforced.

"Holes are strongly discouraged in steel reinforced bearings. However, if holes are used, their effect should be accounted for when calculating the shape factor because they reduce the loaded area and increase the area free to bulge." [1] Suitable shape formulae are:

for rectangular bearings: $$S_i = \frac{LW - \Sigma \frac{\pi}{4} d^2}{h_{ri}[2L + 2W + \Sigma \pi d]}$$

for circular bearings: $$S_i = \frac{D^2 - \Sigma d^2}{4h_{ri}(D + \Sigma d)}$$

where:

L = length of a rectangular bearing (parallel to the longitudinal bridge axis) (in.)
W = width of bearing in transverse direction (in.)
h_{ri} = thickness of the elastomeric layer (in.)
d = diameter of the hole or holes in the bearing (in.)

D = diameter of the projection of the loaded surface of the bearing in the horizontal plane (in.)

To assist the designer, the total thickness for steel reinforced bearings is tabulated below.

Design Thickness	Number of ½" Layers*	Number of Steel Plates	Actual Thickness	
			Minimum	Maximum**
1.0"	2	2	1.15	1.29
1.5"	3	3	1.73	1.89
2.0"	4	4	2.30	2.48
2.5"	5	5	2.88	3.08
3.0"	6	6	3.45	3.67
3.5"	7	7	4.03	4.27
4.0"	8	8	4.60	4.86
4.5"	9	9	5.18	5.46
5.0"	10	10	5.75	6.05
5.5"	11	11	6.33	6.65
6.0"	12	12	6.90	7.24

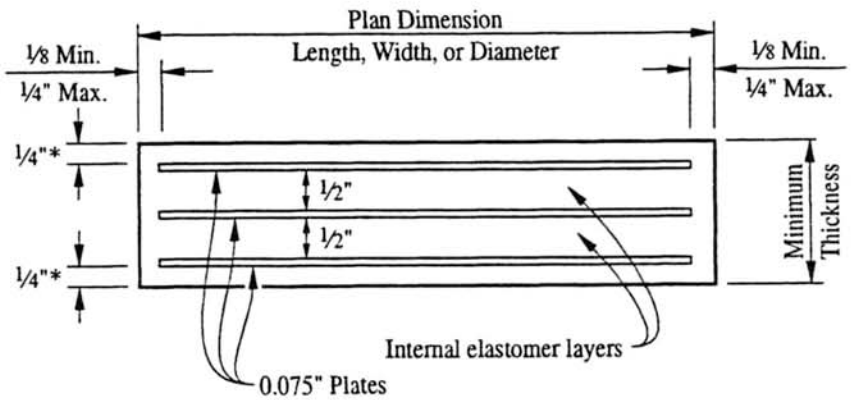

Steel Laminated Elastomeric Bearing Pad
1.5", 3-Layer Pad Shown

* The ¼" layer top and bottom is considered one ½" layer for design purposes.
** Includes consideration for allowable tolerances for steel plates and elastomer thickness.

Example 2. Steel Reinforced Pad – CIP P/S Structure

Given:

Span 5 Hinge, (See Attachment 2)

Structure Length	= 740 feet
Contributory Length – 100' (CIP P/S), 156' (PCC)	= 256 feet
DL Reaction/Girder – Service Load	= 148 kips
LL Reaction/Girder – Service Load, No Impact	= 41 kips
Moderate Temperature Zone – Rise and Fall	= 35°F
Sliding Bearing Used	

Step 1. Temperature Movement = $1.5 \times 0.0000060 \times 35 \times 256 \times 12 = 0.97"$

Step 2. Concrete Shortening (sliding bearing accounts for 50 percent of shortening)

P/S Shortening $0.5 \times (0.10'/100') \times 100 \times 12" = 0.60"$

Concrete Shrinkage $(0.005'/100') \times 156' \times 12" = 0.09"$

Step 3. Minimum Thickness of Pad = 2 × horizontal movement = 2 × (0.97 + 0.60 + 0.09) = 3.32". Try $T = 3.5"$ (elastomer only)

$$\text{Maximum Pressure} = \frac{DL + LL}{W \times L} = 1{,}000 \text{ psi}$$

$$W \times L = \frac{148 + 41}{1.0} = 189 \text{ in.}^2 = 13.7" \times 13.7"$$

Trial Pad: 14" × 16" × 3.5"

Note: 14 × 16 pad was selected because 14 × 14 pad has a shape factor of only 7.0, which results in a maximum compressive stress of 800 psi.

Maximum Thickness of Pad: ⅓ of length or width $= \frac{14}{3} = 4.7$

$T = 3.5"$ Okay

Step 4. Compressive Stress

$$\frac{DL+LL}{W\times L}=\frac{148+41}{14\times 16}=843 \text{ psi} < 1{,}000 \quad \text{Okay} \quad (\text{Shape Factor} \geq 7.5 \text{ required})$$

Compressive Stress (Dead Load Only)

$$\frac{DL}{W\times L}=\frac{148}{14\times 16}=660 \text{ psi} > 200 \quad \text{Okay}$$

Step 5. Initial Vertical Deflection

$$\text{Shape Factor} = \frac{W\times L}{W+L}=\frac{14\times 16}{14+16}=7.47 \sim 7.5$$

From Figure 4B, for compressive stress = 843 and shape factor = 7.5, initial compressive strain is 4.5 percent of pad thickness < 7 percent (by extrapolation).

Initial Thickness = 3.5 – (3.5 × 0.045) = 3.34"

Final Thickness after creep = 3.34 – (3.5 × 0.045) × 0.25 = 3.30"

Step 6. Calculate the maximum shear force at slippage (minimum compressive force = *DL* in this example)

$$F_{s\,\max}=\frac{DL}{5}=\frac{148}{5}=29.6 \text{ kips (Allowable)}$$

Actual Design Shear Force =

$$\frac{\text{Modulus}\times\text{Area}\times\text{Movement}}{\text{Pad Thickness}\times 1{,}000}=\frac{169\times(16\times 14)\times 1.66}{3.5\times 1{,}000}=18.0 \text{ kips}$$

29.6 kips > 18.0 kips Okay

Therefore $T = 3.5"$ Okay

Specify "Steel Reinforced Elastomeric Bearing Pads 14" × 16" × 3.5" (elastomer only)."

To reduce rotational (compressive) stresses, orient rectangular bearing pads so that the long side is parallel to the axis about which the largest rotation occurs.

To complete the design, repeat steps 3 through 6 using the design criteria for fabric reinforced pads (if applicable) and include this design on the contract plans.

Example 3. Steel Reinforced Pad – CIP P/S Structure

Given:

Span 5 Hinge, (See Attachment 2). Due to construction staging spans 5 and 6 will not be completed for 1 year.

Span Length	= 740 feet
Contributory Length – 100' CIP P/S (Stage 1), 156' PCC (Stage 2)	= 256 feet
DL Reaction/Girder – Service Load	= 148 kips
LL Reaction/Girder – Service Load, No Impact	= 41 kips
Moderate Temperature Zone – Rise and Fall	= 35°F
Sliding Bearing Used	

Step 1. Temperature Movement = $1.5 \times 0.0000060 \times 35 \times 256 \times 12 = 0.97"$

Step 2. Concrete Shortening

P/S Shortening (refer to Attachment 1). Enter graph with 72 weeks after stressing (52 week waiting period + 20 weeks for sliding bearing).

Shortening/100' = 0.025'/100' (Stage 1 after 72 weeks)

$$(0.025'/100') \times 100' \times 12" = 0.30"$$

Concrete Shrinkage $(0.005'/100') \times 156' \times 12" = 0.09"$

Step 3. Minimum Thickness of Pad = $2 \times (0.97" + 0.30" + 0.09") = 2.72"$. Try $T = 3.0"$ (elastomer only)

$$\text{Maximum Pressure} = \frac{DL + LL}{W \times L} = 1{,}000 \text{ psi}$$

$$W \times L = \frac{148 + 41}{1.0} = 189 \text{ in.}^2 = 13.7" \times 13.7"$$

Trial Pad: $14" \times 16" \times 3.0"$

Note: 14×16 pad was selected because 14×14 pad has a shape factor of only 7.0, which results in a maximum compressive stress of 800 psi.

Maximum Thickness of Pad: ⅓ of length or width $= \frac{14}{3} = 4.7$

$T = 3.0"$ Okay

Step 4. Compressive Stress

$$\frac{DL + LL}{W \times L} = \frac{148 + 41}{14 \times 16} = 843 \text{ psi} < 1{,}000 \quad \text{Okay} \quad (\text{Shape Factor} \geq 7.5 \text{ required})$$

Compressive Stress (Dead Load only)

$$\frac{DL}{W \times L} = \frac{148}{14 \times 16} = 660 \text{ psi} > 200 \quad \text{Okay}$$

Step 5. Initial Vertical Deflection

$$\text{Shape Factor} = \frac{W \times L}{W + L} = \frac{14 \times 16}{14 + 16} = 7.47 \sim 7.5$$

From Figure 4B, for compressive stress = 843 and Shape Factor = 7.5, initial compressive strain is 4.5 percent of pad thickness < 7 percent (by extrapolation).

Initial Thickness $= 3.0 - (3.0 \times 0.045) = 2.87"$

Final Thickness after creep $= 2.87 - (3.0 \times 0.045) \times 0.25 = 2.84"$

Step 6. Calculate the maximum shear force at slippage (minimum compressive force equals *DL* in this example)

$$F_{s\max} = \frac{DL}{5} = \frac{148}{5} = 29.6 \text{ kips (Allowable)}$$

Actual Design Shear Force =

$$\frac{\text{Modulus} \times \text{Area} \times \text{Movement}}{\text{Pad Thickness} \times 1{,}000} = \frac{169 \times (16 \times 14) \times 1.36}{3.0 \times 1{,}000} = 17.2 \text{ kips}$$

17.2 kips < 29.6 kips Okay

Therefore $T = 3.0"$ Okay

Specify "Steel Reinforced Elastomeric Bearing Pads 14" × 16" × 3.0" (elastomer only)."

To reduce rotational (compressive) stresses, orient rectangular bearing pads so that the long side is parallel to the axis about which the largest rotation occurs.

To complete the design, repeat steps 3 through 6 using the design criteria for fabric reinforced pads (if applicable) and include this design on the contract plans.

PTFE Sliding Surfaces

General

Polytetrafluoroethylene (PTFE) was first used in bridge bearings in the early 1960's because of its low frictional characteristics, chemical inertness and resistance to weathering. [4] Many modern bearing systems such as pot, spherical, disk, etc., use PTFE in contact with stainless steel as a sliding surface.

PTFE is usually used in the form of sheet resin (filled or unfilled) and woven fabric made fromPTFE fibers. [4] Although the actual chemical formulation of PTFE is of little interest to the designer, the physical properties and performance characteristics are.

The two most important design aspects of PTFE are the coefficient of friction and the wear rate. [4] The coefficient of friction controls the forces transmitted to other parts of the bearing device and the substructure. The wear rate affects the design life and maintenance of the bearing.

Extensive research and testing by Stanton, Roeder and Campbell has demonstrated that the coefficient of friction and the wear rate are affected by several variables in addition to the type of PTFE and mating surface.

PTFE Types

Unfilled PTFE Sheet Resin (Dimpled Lubricated)

Dimpled lubricated PTFE manufactured from unfilled sheet resin has the lowest coefficient of friction under all load conditions. [4] The dimples function as reservoirs that store the grease for continuous lubrication. Testing by Stanton, Roeder and Campbell has shown that the absence of dimples will result in a higher coefficient of friction as the grease is dissipated. While dimpled lubricated PTFE has the lowest coefficient of friction, it is also the most sensitive to problems and deficiencies. [4]

Woven Fabric PTFE

Woven fabric PTFE made from PTFE fibers has a higher coefficient of friction than dimpled lubricated PTFE, however, it has a greater resistance to creep. Woven fabric can take up to 30 times the compressive stress without cold flow as compared to PTFE resin. [4]

Filled PTFE Sheet Resin

Filled PTFE sheet resin has the highest coefficient of friction as compared to unfilled PTFE sheet resin and woven fabric PTFE. Fillers such as glass fiber, graphite and ceramics etc., are incorporated in PTFE resins to alter properties, such as cold flow, compressive strength etc. [4]

Factors that affect PTFE Performance [4]

Friction

- Friction increases with decreasing contact pressure, decreasing temperature, increasing sliding speed and increasing number of cycles.
- Static friction is usually higher than dynamic friction.
- Maximum coefficient of friction (spike) occurs at the onset of movement.
- Type of surface finish on mating surface affects friction.
- Direction of surface finish on PTFE mating surface affects coefficient of friction. Surface finishes parallel to the direction of sliding give lower friction values.
- Friction increases to near static value if PTFE surface remains loaded for a period of time without movement. This generally is not a problem on highway structures.
- Lubrication reduces friction.
- Friction values could be 5 to 10 times higher at seismic speeds as compared to thermal expansion speeds.

Wear and Creep (Cold Flow)

- Sliding speed is the most significant factor affecting wear. Increased sliding speed increases wear.
- Decreased temperature increases wear.
- Lubricant reduces the wear rate of sheet resin.
- Wear and creep increase with increasing loads.
- Sheet resin disks should be recessed half their thickness into their backing plate to reduce creep.

Suggested Values for Coefficient of Friction

The minimum coefficient of friction used for design shall be as specified by the bearing manufacturer or as given in Article 15.2.6 of the *Bridge Design Specifications*. Designers are cautioned against using design friction values that are too low. Low friction values are sometimes difficult to obtain in manufactured bearings and may result in transfer of larger forces to the bearing and substructure than calculated.

Suggested Design Bearing Pressures for PTFE Surfaces

The average bearing pressure on PTFE surfaces due to all loads shall not exceed:

Filled PTFE ..... 3,500 psi

Unfilled PTFE (Recessed) ..... 3,500 psi

Woven Fabric PTFE ..... 3,500 psi

Additional values may be found in Article 15.2.7 of the *Bridge Design Specifications*. Bearing pressures below 2,000 psi are not recommended as they produce high coefficients of friction and poor bearing performance. Unfilled PTFE (not recessed) should not be used on Division of Structures designs.

PTFE/Spherical Bearings

General

PTFE/Spherical bearings designed in accordance with *Bridge Design Specifications*, Section 15 should be considered for use only when the practical limits of reinforced elastomeric bearing pads have been exceeded.

The basic spherical bearing design is comprised of a convex base with a mating concave element for rotation. On expansion bearings, an upper sliding plate is added for translation. All contact surfaces are polytetrafluoroethylene (PTFE) to stainless steel.

PTFE/Spherical Bearing Types

PTFE/Spherical bearings are available in three different forms, each designed to meet different functional requirements. The three standard types of PTFE/Spherical bearings in use today are: (1) expansion (non-guided), (2) expansion (guided), and (3) fixed.

Expansion non-guided bearings allow horizontal movement and rotation in all directions, (see Figure 5, page 29). Expansion guided bearings allow horizontal movement along only one axis and rotation in all directions, (see Figure 6, page 30). Fixed bearings are restrained from horizontal movement in all directions while allowing rotation in all directions, (see Figure 7, page 31). Due to previous problems experienced with guided bearings, they will not be considered for use by the Division of Structures.

PTFE/Spherical expansion bearings (non-guided) are comprised of four basic components: (1) sole plate, (2) concave plate, (3) convex plate, and (4) masonry plate. PTFE/Spherical fixed bearings are similar except that a nonsliding sole plate may or may not be required. The function of the four components mentioned above and the typical manufacturing materials are as follows, (see Figure 8, pages 32 and 33):

- *Sole Plate* – Transfers superstructure loads to the bearing and provides a stainless steel sliding surface for superstructure translation. The sole plate is fabricated from A36/A36M steel and has a stainless steel surfacing.
- *Concave Plate* – Provides PTFE sliding surface for sole plate and PTFE concave surface for rotation. The concave plate is fabricated from A36A/36M steel. A woven PTFE pad is epoxy bonded and mechanically fastened to the flat and concave surfaces. Dimpled lubricated PTFE has been used by some manufac-

tures. However, woven PTFE fabric is preferred for this type of bearing and should be used for Division of Structures designs.

- *Convex Plate* – Provides stainless steel mating surface for rotation of concave plate and transfers load to masonry plate. The convex plate is usually made from solid stainless steel, or A36/A36M with a stainless steel weld overlay.
- *Masonry Plate* – Transfers load from convex plate to bearing seat. The masonry plate is fabricated from A36/A36M steel.

Design Requirements

PTFE/Spherical bearings are designed in accordance with Section 15 of the *Bridge Design Specifications*. All loads are service loads. Minimum vertical loads are for dead loads and superimposed dead loads. Maximum vertical loads are for dead loads, superimposed dead loads and live loads plus impact. PTFE fabric stresses are limited to 3,500 psi maximum. The coefficient of friction for fabric containing PTFE fibers varies from 0.08 to 0.04 at bearing pressures of 500 psi and 3,500 psi respectively. A design coefficient of friction of 0.06 is recommended for designs with bearing pressures from 2,000 psi to 3,500 psi. Bearing pressures below 2,000 psi (*DL* only), should not be used.

Design Guidelines

The nucleus of all spherical bearings is the concave/convex plate interface (spherical surface). All loads, vertical and horizontal are transmitted through the interface. Since the spherical interface slides on low friction materials (PTFE to stainless steel), all stresses that pass through the interface are assumed to be radially transmitted through the geometric center of the sphere (see Figure 9, page 34). The low friction interface is assumed to provide no frictional resistance to horizontal loads. Due to the complexity of the analysis required to accurately determine the stresses at the concave/convex plate interface, simplified design guidelines were developed by bearing committees and adopted by AASHTO. The procedure to design the interface, complete with formula derivations, and other PTFE/spherical bearing components is outlined below. Refer to Figure 9 for bearing geometrics.

PTFE/Spherical Bearing Notations

A_h = total assembly height (inches)

A_{PTFE} = PTFE area of flat sliding surface (in.^{2})

c = minimum vertical clearance between rotating and non-rotating bearing parts

C_m = minimum convex chord length (inches)

DB_{act} = minimum concave bearing pad diameter (arc length)

D_m = diameter of minimum allowable projected bearing area, concave plate (inches)

H = height of convex spherical surface (inches)

H_{act} = overall height of convex plate (inches)

L_{cp} = length and width of concave plate (inches)

L_{max} = maximum longitudinal movement (inches)

L_o = sole plate safety overhang (inches)

L_{sp} = longitudinal length of sole plate (inches)

M_m = minimum metal depth of concave surface (inches)

$P_{H\,max}$ = maximum horizontal load (kips)

$P_{L\,max}$ = maximum longitudinal load (kips)

$P_{T\,max}$ = maximum transverse load (kips)

$P_{V\,max}$ = maximum vertical load (kips)

$P_{V\,min}$ = minimum vertical load (kips)

R_{act} = actual radius of concave bearing sliding surface (inches)

R_{max} = maximum allowable radius of concave bearing sliding surface (inches)

T_m = maximum transverse movement (inches)

U_{max} = maximum allowable unit pressure for PTFE (3.5 ksi)

W_{sp} = transverse width of sole plate (inches)

α_{min} = minimum angle to prevent uplift (degrees)

β = minimum design rotation capacity of bearing, ($\beta = \beta_s + \beta_c$), 2 degrees minimum

β_c = maximum rotation resulting from construction tolerances (0.02 radians)

β_s = minimum design rotation capacity of structure from: *DL*, *LL*, camber changes, and construction/erection sequences

γ_{min} = minimum angle of convex surface (degrees)

ψ_{min} = minimum angle of concave bearing surface (degrees)

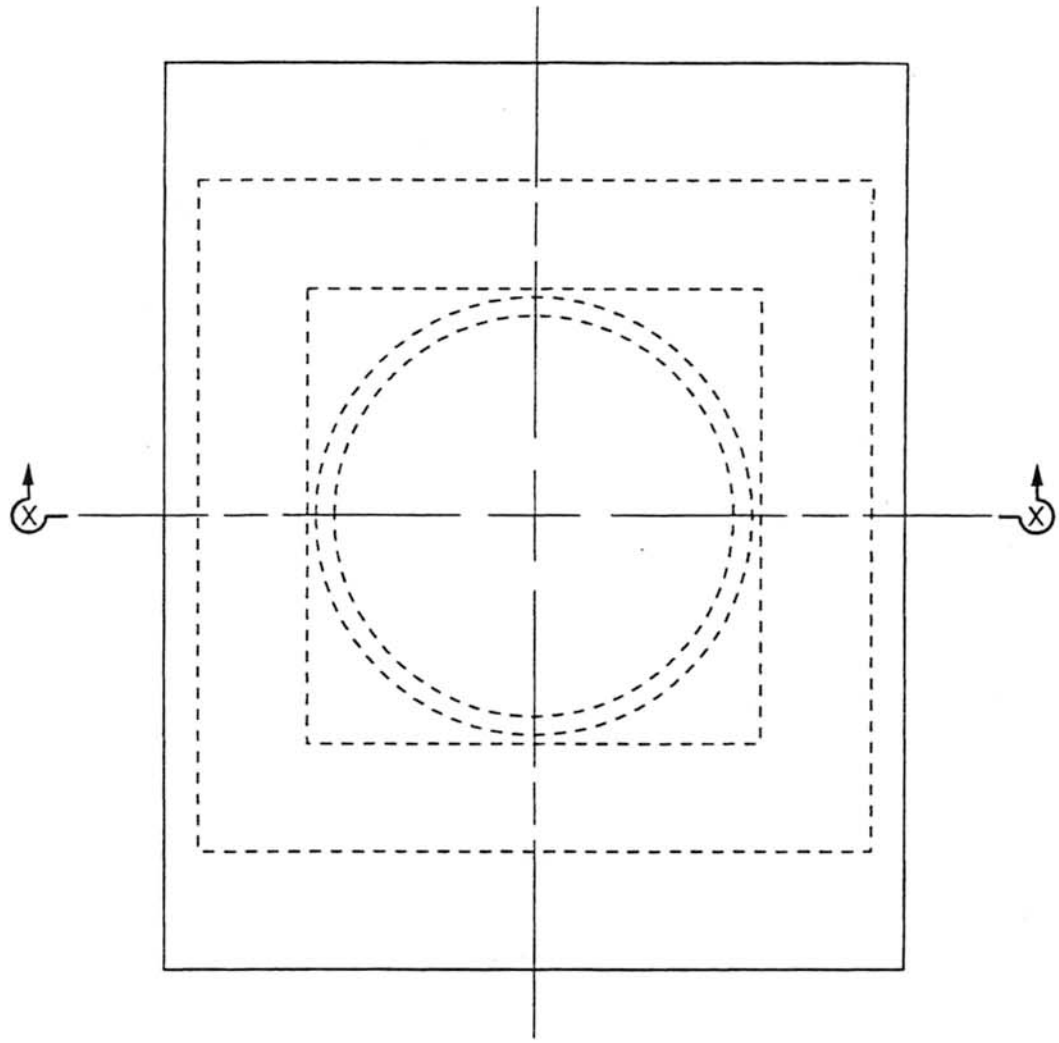

Plan

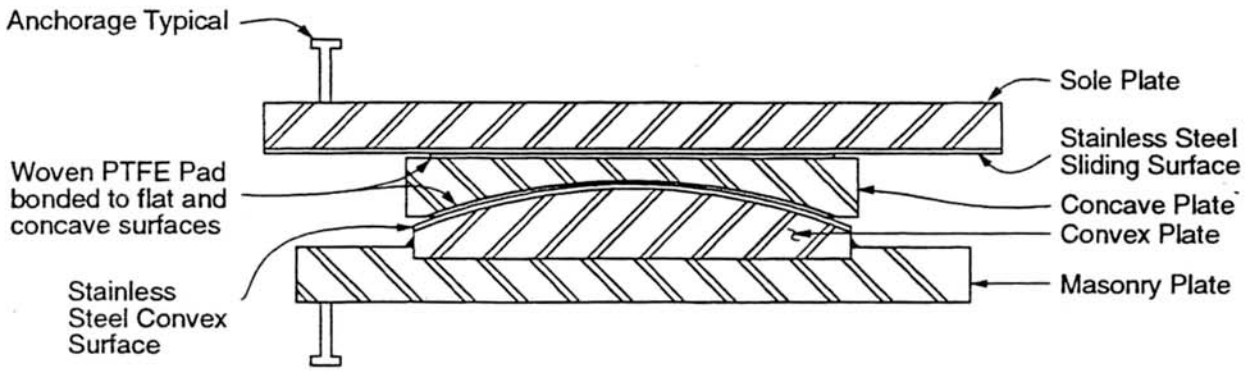

Section X-X

Figure 5. PTFE/Spherical Expansion Bearing (Non-Guided)

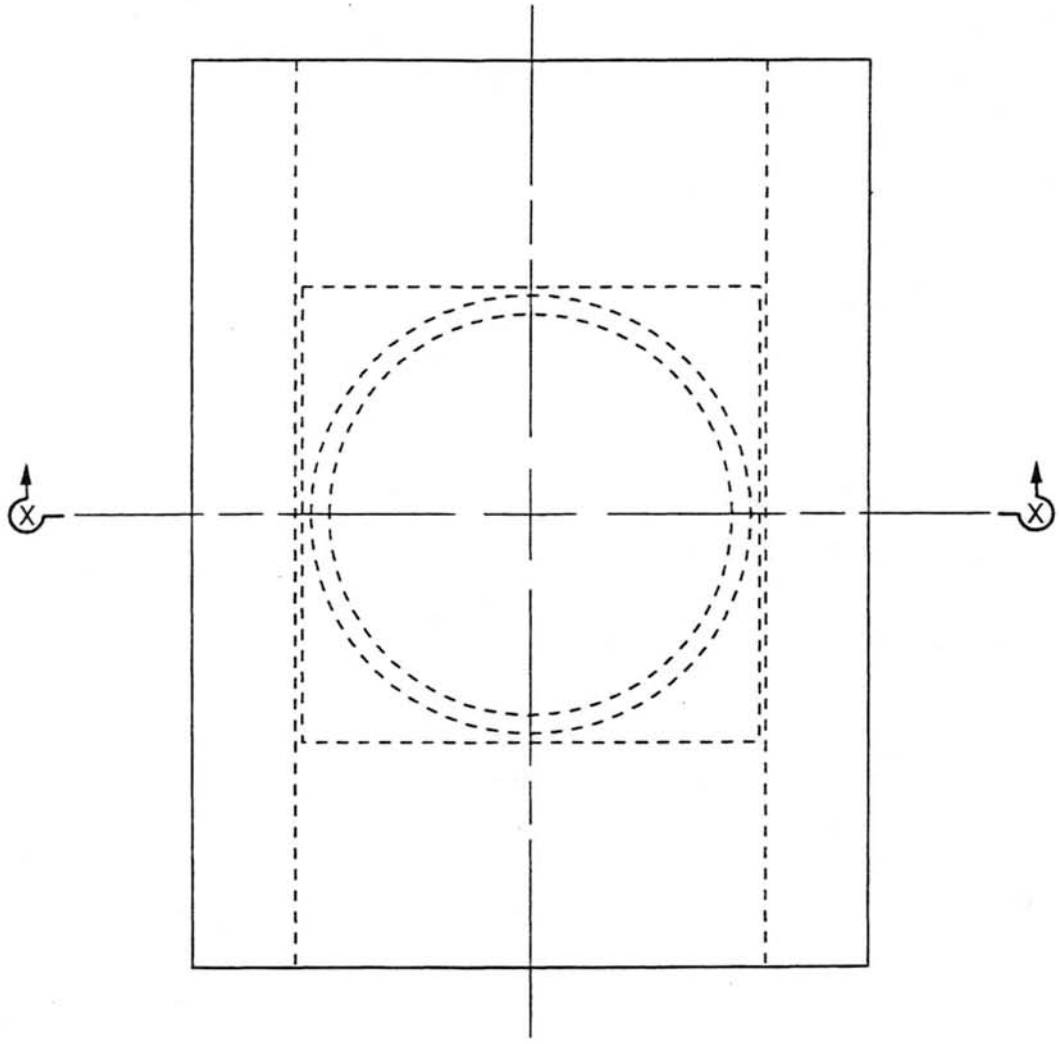

Plan

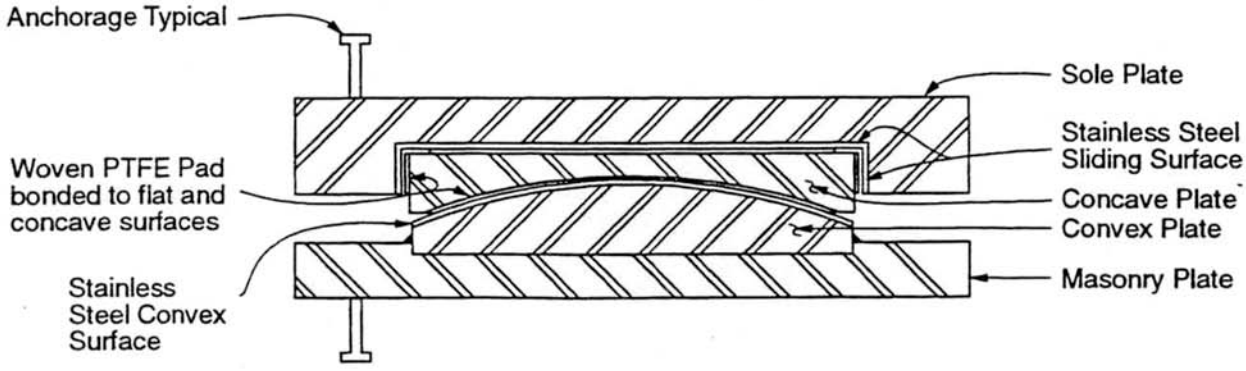

Section X-X

Figure 6. PTFE/Spherical Expansion Bearing (Guided)

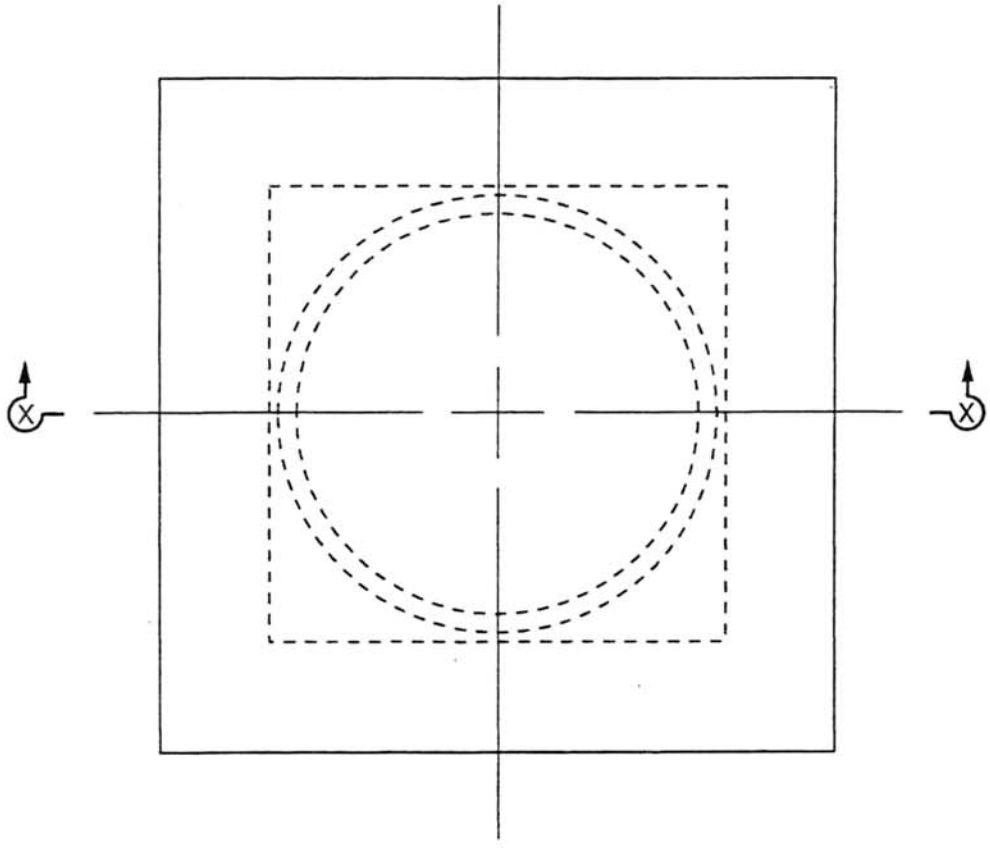

Plan

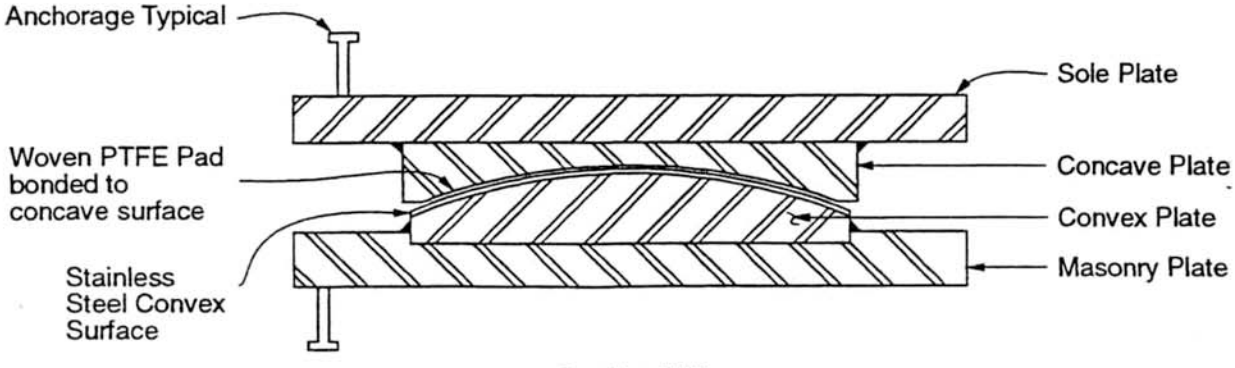

Section X-X

Figure 7. PTFE/Spherical Fixed Bearing

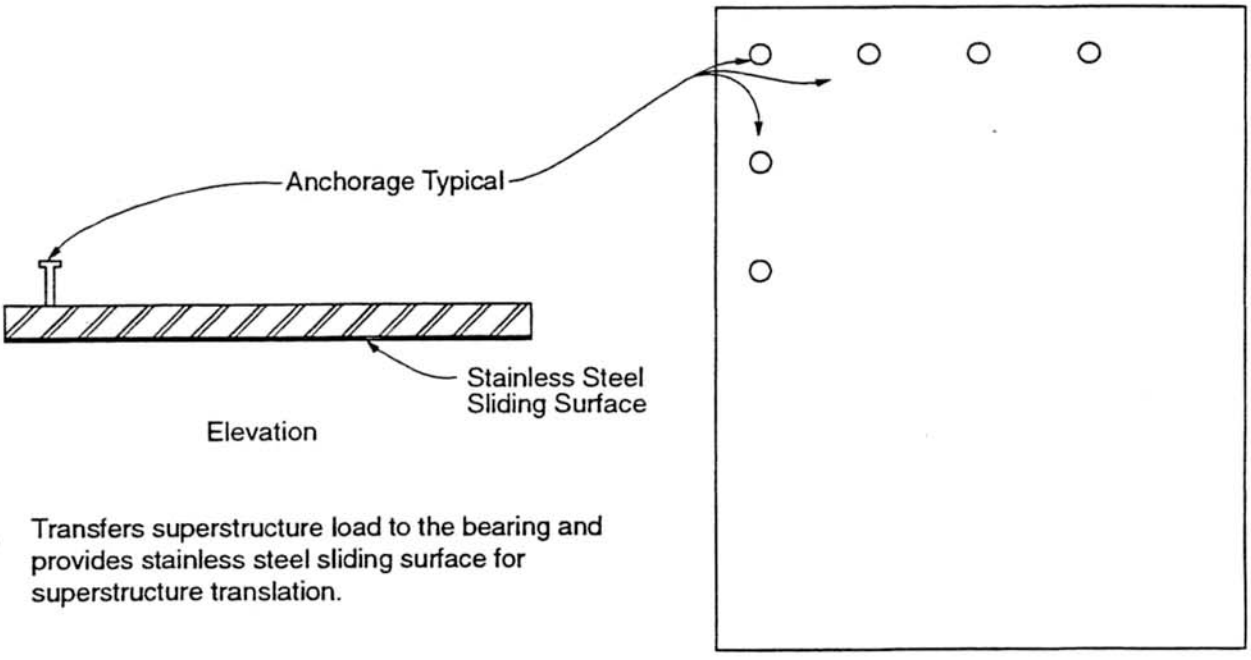

Elevation

Transfers superstructure load to the bearing and provides stainless steel sliding surface for superstructure translation.

Plan

Sole Plate

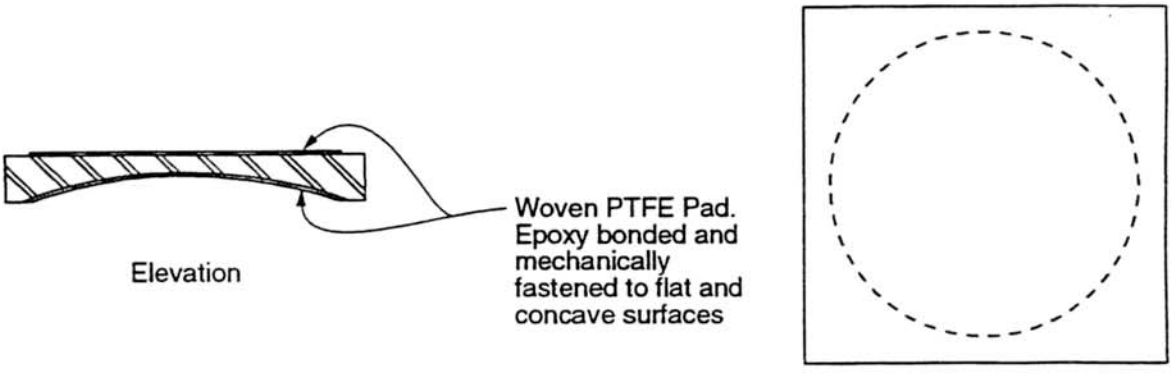

Elevation

Plan

Provides PTFE sliding surface for sole plate and PTFE concave surface for rotation.

Concave Plate

Figure 8. PTFE/Spherical Expansion Bearing Components

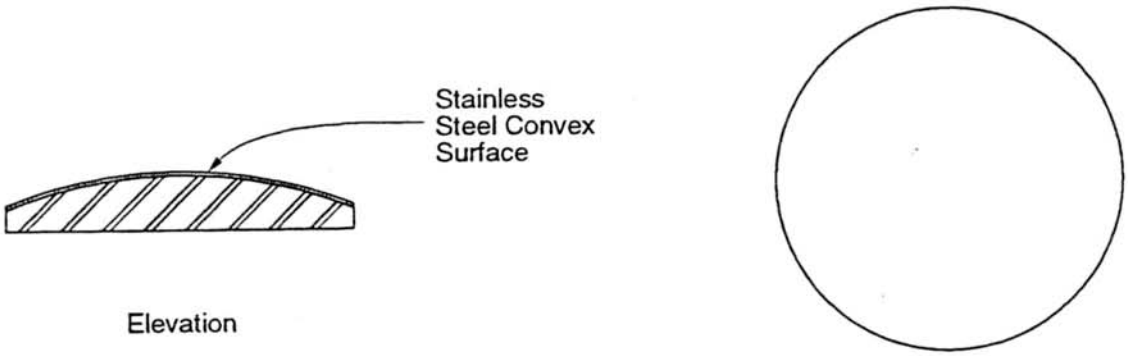

Elevation

Plan

Provides stainless steel mating surface for rotation of concave plate and transfers load to masonry plate.

Convex Plate

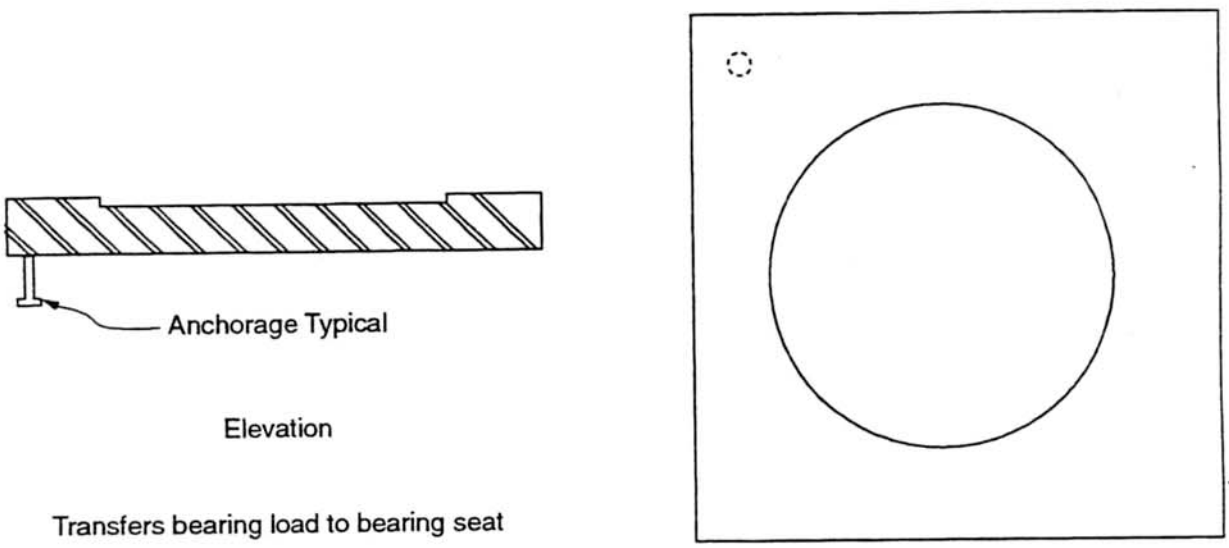

Elevation

Transfers bearing load to bearing seat

Plan

Masonry Plate

Figure 8. PTFE/Spherical Expansion Bearing Components *(continued)*

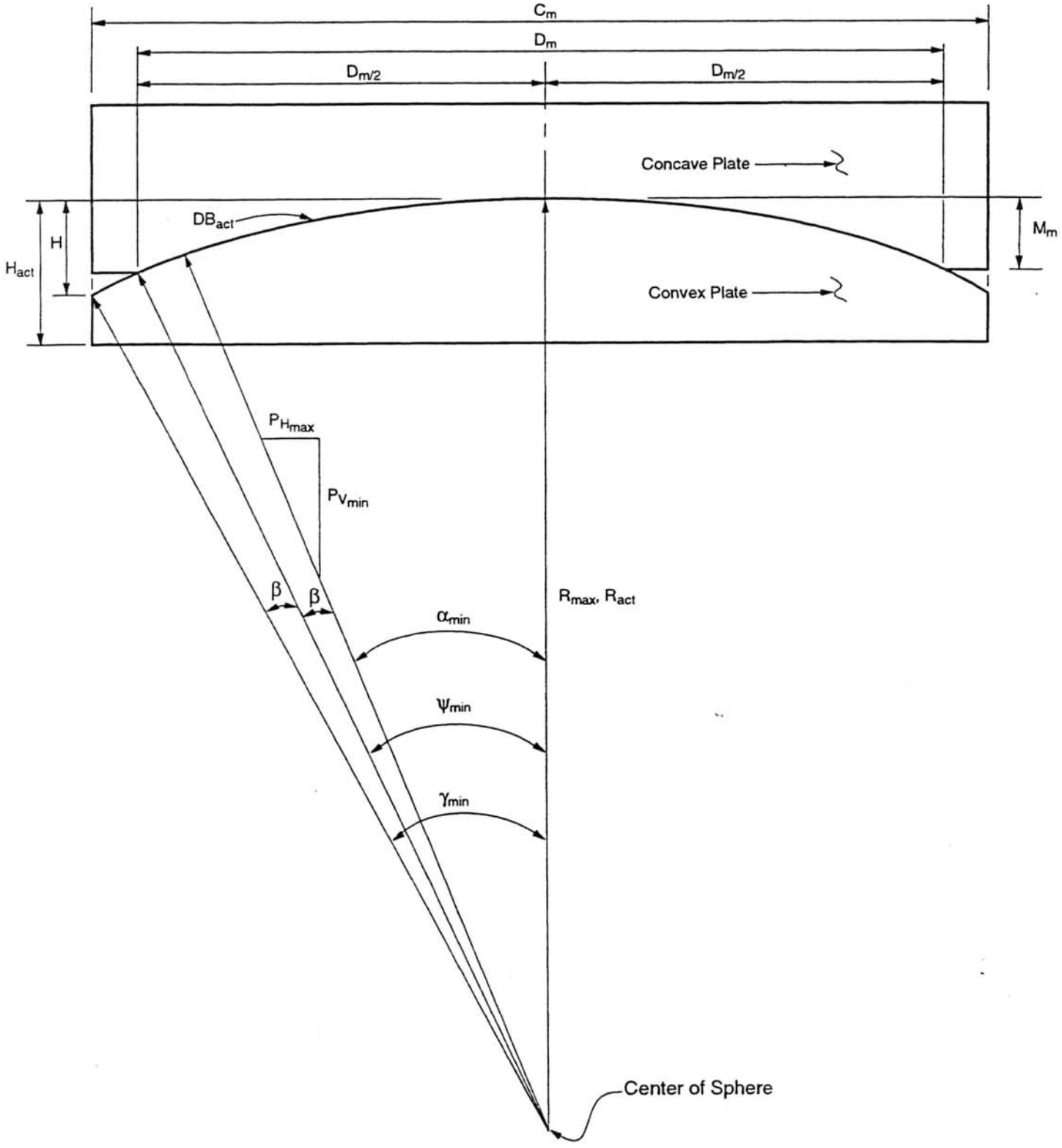

Figure 9. Spherical Bearing Geometrics

Design Procedure

Concave Plate

- Diameter (D_m) of Minimum Allowable Projected Bearing Area

The minimum diameter (D_m) of the concave spherical plate must be large enough to ensure that the maximum bearing stress (σ_u) on the horizontal projected area of the plate does not exceed the maximum allowable stress on the PTFE fiber (3,500 psi). Therefore, the minimum diameter (D_m) may be determined from the maximum vertical load ($P_{V\,\max}$) and the PTFE maximum allowable unit pressure ($U_{\max}$).

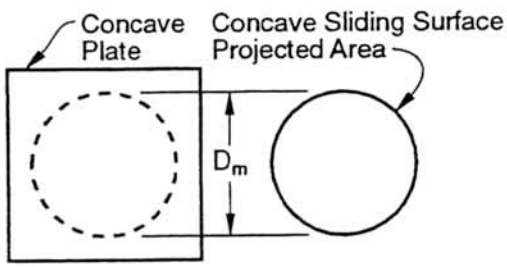

$P_{V\,\max}$ = Maximum Vertical Load

$U_{\max}$ = Maximum allowable unit pressure (PTFE = 3,500 psi)

Derivation:

$$\frac{P_{V\,\max}}{U_{\max}} = \text{Area} = \frac{\pi D_m^2}{4} \therefore D_m = \left[4\left(\frac{\frac{P_{V\,\max}}{U_{\max}}}{\pi}\right)\right]^{\frac{1}{2}} \therefore D_m = 2\left[\frac{P_{V\,\max}}{\pi U_{\max}}\right]^{\frac{1}{2}}$$

- PTFE Area (A_{PTFE}) of Flat Sliding Surface

The flat PTFE sliding surface area on the concave plate should be size to the nearest 0.25 inch using the maximum allowable stress on the PTFE fiber (3,500 psi).

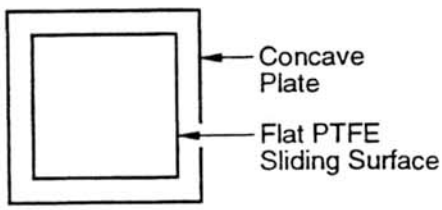

$$A_{\text{PTFE}} = \frac{P_{V\,\max}}{U_{\max}}$$

- Minimum Angle (α_{min}) Required to Prevent Uplift

The minimum angle (α_{min}) is used to calculate the spherical radius required to resist the greatest ratio of horizontal to vertical load without unseating of the concave plate. On expansion (non-guided) bearings, the maximum horizontal load cannot be transferred from the sole plate to the concave plate because the sole plate is free to slide horizontally. Therefore, on expansion non-guided bearings, it is recommended that a horizontal load equal to 10 percent of the maximum vertical load and a minimum dead load of 50 percent of the maximum vertical load or the actual minimum dead load, whichever is smaller, be used to determine α_{min}.

For fixed bearings, the horizontal to vertical load ratio should not exceed 40 percent when using simplified design procedures. Using the simplified procedure on load cases above the 40 percent level will result in over stressing the PTFE fabric at the spherical interface. Hence, external shear devices are required to fix bearings during seismic activity exceeding the 40 percent ratio.

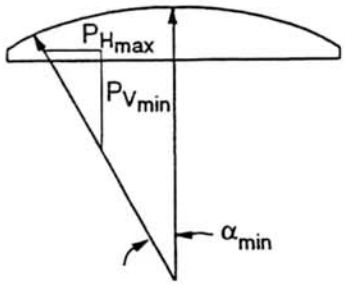

$P_{H_{max}}$= Max horizontal load

$P_{V_{min}}$= Min vertical load (including uplift)

$$\alpha_{min} = \tan^{-1}\frac{P_{H\,max}}{P_{V\,min}}$$

It is evident from the formula above that spherical bearings virtually have no resistance to horizontal loads unless a vertical load is present. Without the presence of a vertical load, the concave plate will ride up and off the convex plate.

- Minimum Angle (ψ_{min}) of Concave Bearing Surface

The minimum angle (ψ_{min}) of the concave bearing surface determines the combined rotation and horizontal load capacity of the bearing. The minimum design rotation capacity (β) for spherical bearings is usually 2 degrees and should include rotations from *DL*, *LL*, camber changes, construction tolerances and erection sequences.

$$\psi_{min} = \alpha_{min} + \beta$$

β = minimum design rotation capacity of bearing. ($\beta = \beta_s + \beta_c$), 2 degrees minimum.

- Maximum Allowable Radius (R_{max}) of Concave Bearing Sliding Surface

The maximum allowable radius (R_{max}) defines the spherical curvature which resists the applied horizontal forces and provides rotation. R_{max} is calculated from the minimum projected diameter (D_m) and the minimum angle (ψ_{min}). Due to manufacturing limitations, R_{max} should not exceed 36 inches. Hence, the actual radius (R_{act}) of the concave bearing surface may be less than R_{max}. This limitation is usually not a problem because the smaller radius will increase the allowable rotation and/or increase the lateral load capacity.

Derivation:

$$\sin\psi_{min} = \frac{D_m/2}{R_{max}}$$

$$R_{max} = \frac{D_m}{2\sin(\psi_{min})}$$

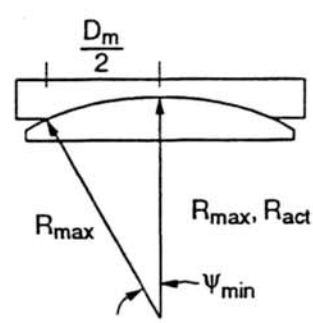

If $R_{max} > 36"$, use $R_{max} = 36"$.

- Minimum Concave Bearing Pad Diameter (DB_{act})

The minimum concave bearing pad diamter (DB_{act}) is used to calculate the minimum metal depth (M_m) of the cancave surface, and the minimum angle (γ_{min}) of the convex surface.

DB_{act} is the arc length along the concave bearing sliding surface.

Derivation:

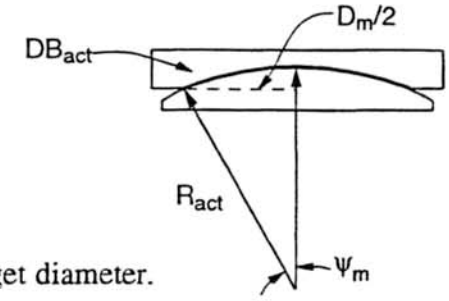

Arc length = radius × angle in radians

$$\psi_m = \sin^{-1}\left(\frac{D_m/2}{R_{act}}\right) \text{ (degrees)}$$

$\pi/180$ converts to radians, multiply by 2 to get diameter.

$$DB_{act} = 2\left[R_{act}\left(\frac{\pi}{180}\left(\sin^{-1}\frac{D_m/2}{R_{act}}\right)\right)\right]$$

- Minimum Metal Depth (M_m) of Concave Surface

Derivation:

Arc length = radius × angle in radians

$$\frac{DB_{act}}{2} = R_{act}(\psi_{min})\left(\frac{\pi}{180}\right)$$

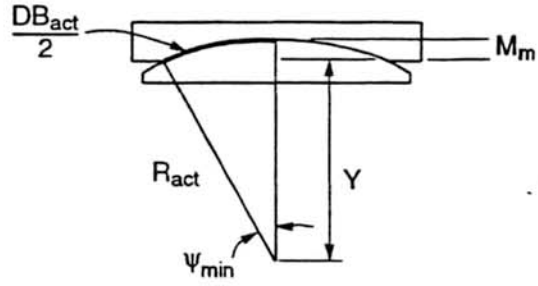

$$\psi_{min} = \frac{DB_{act}}{2R_{act}}\left(\frac{180}{\pi}\right)$$

$$\cos\psi_{min} = \frac{Y}{R_{act}}, \quad Y = R_{act}\cos\psi_{min}$$

$$Y = R_{act}\cos\left[R_{act}\cos\left(\left(\frac{DB_{act}}{2R_{act}}\right)\left(\frac{180}{\pi}\right)\right)\right] \therefore M_m = \mathrm{R}_{act} - Y + \text{PTFE Thickness}$$

$$M_m = R_{act} - \left[R_{act} \cos\left(\left(\frac{DB_{act}}{2R_{act}} \right) \left(\frac{180}{\pi} \right) \right) \right] + \text{PTFE Thickness}$$

Use 0.09375" thick PTFE for design. Actual values vary form 1/32" to 1/8" as specified in the *Standard Special Provisions.*

Note: Some manufacturers attach the PTFE fabric to a substratum which is attached to the concave surface.

- Minimum Metal Thickness at Center Line (T_{min})

T_{min} = 0.75" minimum

- Maximum Metal Thickness (T_{max})

$T_{max} = T_{min} + M_m + 0.125"$ (1/8" allows for maximum PTFE thickness and and substratum

- Length and Width (L_{cp}) of Concave Plate

L_{cp} = Projected diameter (D_m) + 1.125"

Note: 1.125" allows for edge distance, substratum, and PTFE.

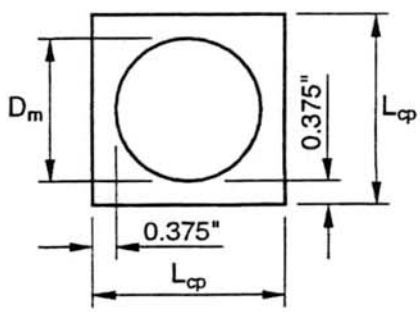

Convex Spherical Plate

- Minimum Angle (γ_{min}) of Convex Surface

The minimum angle (γ_{min}) of the convex surface allows the maximum rotation of the concave plate without loss of contact area.

$$\gamma_{min} = \psi_{min} + \beta$$

$$\gamma_{min} = \left(\frac{DB_{act}}{2R_{act}} \right) \left(\frac{180}{\pi} \right) + \beta$$

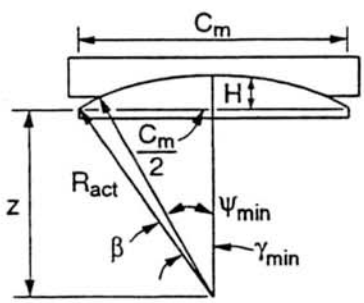

- Minimum Convex Chord (C_m) Length

  Derviation:

$$\sin\gamma_{\min} = \frac{C_m/2}{R_{act}} \quad \therefore \quad C_m = 2\left[\, R_{\text{act}}\left(\sin\left(\gamma_{\min}\right)\right)\right]$$

- Height of Convex Spherical Surface (H)

  Derivation:

$$H = R_{\text{act}} - z$$

$$\left(\frac{C_m}{2}\right)^2 + z^2 = R_{\text{act}}{}^2 \quad \therefore \quad z = \sqrt{R_{\text{act}}{}^2 - \left(\frac{C_m}{2}\right)^2}$$

$$H = R_{\text{act}} - \sqrt{R_{\text{act}}{}^2 - \left(\frac{C_m}{2}\right)^2}$$

- Overall Height of Convex Plate (H_{act})

$$H_{\text{act}} = H + 0.75"$$

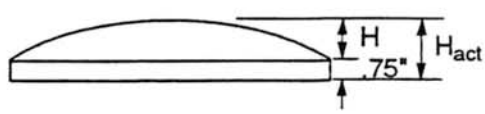

H_{act} includes thickness from stainless steel surfacing and ¼" recessed into masonry plate. The 0.75 inch vertical sides may be increased to provide minimum clearance, or to provide minimum fillet weld height.

- Minimum Vertical Clearance (c)

The minimum vertical clearance (c) ensures that the concave plate does not contact the base plate during maximum rotation.

Spherical bearings square in plan:

$$c = 0.7\, L_{cp}\, \beta + 0.125"$$

Spherical bearings round in plan:

$$c = 0.5\, D_m\, \beta + 0.125"$$

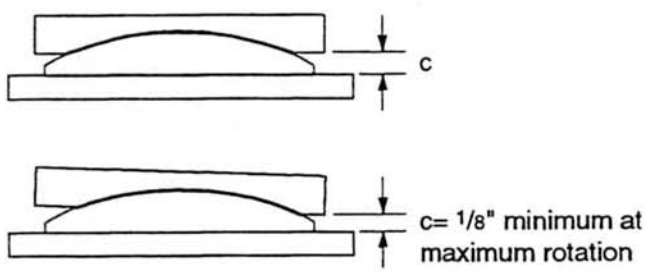

Sole Plate

The sole plate must be sized so that it remains in full contact with the concave plate under all loading conditions.

The safety overhang (L_o) provides a minimum edge distance and allows for additional sliding surface beyond the calculated movement. The value reflects the certainty or uncertainty of the total movement calculation.

L_{cp} = length and width of concave plate
L_{max} = maximum longitudinal movement (including creep, shrinkage, post-tensioning, thermal effects and seismic)
L_o = safety overhang
T_m = maximum transverse movement

- Longitudinal Length of Plate (L_{sp})

$$L_{sp} = L_{cp} + L_{max}\ (\text{total}) + L_{oL}$$

- Tranverse Width of Sole Plate (W_{sp})

  $$W_{sp} = L_{cp} + T_m + L_{oT}$$

- Plate Thickness (T_{sp})

  Design in accordance with AISC design procedure for column base plates when mounted on concrete.

  Recommended minimum thickness: 0.75 inch.

- Anchorage

  Anchorage may be accomplished with shear studs, bolts or welding depending on the structure type. Studs smaller in diameter than ¾ inch are not recommended.

- Bevel

  Bevel sole plate to provide a level bearing plate on steel and precast concrete girder structures.

Masonry Plate

Design in accordance with AISC design procedure for column base plates when mounted on concrete.

Convert convex plate area to equivalent square area to design plate thickness.

Recommended minimum thickness: 0.75 inch

Length and width to accomodate the seating of the convex plate.

Anchorage may be accomplished with shear studs, sleeved anchor bolts or welding depending on the structure type. Studs smaller in diameter than ¾ inch are not recommended.

Example 4. PTFE/Spherical Expansion Bearing (Non-Guided) CIP P/S Structure

Given:

Span 3 Hinge (See Attachment 3)

Structure Length	= 785 feet
Contributory Length – 176' + 255' (CIP P/S)	= 431 feet
DL Reaction/Girder – Service Load	= 271 kips
LL + *I* Reaction/Girder – Service Load	= 50 kips
Moderate Temperature Zone – Rise and Fall	= 35°F
f'_c	= 4 ksi
F_y	= 36 ksi

Concave Plate

- Diameter (D_m) of Minimum Allowable Projected Bearing Area

$P_{V\max}$ (maximum vertical load) = 271 + 50 = 321 kips

$U_{\max}$ (maximum allowable PTFE pressure) = 3,500 psi

$$D_m = 2\left[\frac{P_{V\max}}{U_{\max}}/\pi\right]^{\frac{1}{2}} = 2\left[\frac{321{,}000}{3{,}500}/\pi\right]^{\frac{1}{2}} = 10.81 \quad \text{Say } 11.00'' \text{ (Okay to round)}$$

- PTFE Area (A_{PTFE}) of Flat Sliding Surface

$$A_{PTFE} = \frac{P_{V\max}}{U_{\max}} = \frac{321{,}000}{3{,}500} = 91.7 \text{ in.}^2 \text{ (min)}$$

$(91.7)^{1/2} = 9.58^2$ use 9.75^2 $\therefore A_{PTFE} = 95$ in.^{2}

- Minimum Angle ($\alpha_{\min}$) Required to Prevent Uplift

$P_{H\max}$ (maximum horizontal load) = (0.10) (321) = 32.1 kips

$P_{V\min}$ (minimum vertical load) = (0.50) (321) = 160.5 kips < 271 kips $\therefore$ use 160.5 kips

$$\alpha_{\min} = \tan^{-1}\left(\frac{P_{H\max}}{P_{V\min}}\right) = \tan^{-1}\left(\frac{32.1}{160.5}\right) = 11.31°$$

- Minimum Angle (ψ_{min}) of Concave Bearing Surface

  α_{min} = angle required to resist uplift = 11.31°

  β_s = Structure rotation, 0.003 radians = 0.17°

  β_c = Construction rotation, assume 0.02 radians = 1.15°

  $\beta = \beta_s + \beta_c = 1.32°$ use 2° min = 2.0°

  Note: *Bridge Design Specifications*, Article 15.2.2 requires a minimum rotation capacity of 0.015 radians (0.86°).

  $\psi_{min} = \alpha_{min} + \beta = 11.31° + 2° = 13.31°$

- Maximum Allowable Radius (R_{max}) of Concave Surface

$$R_{max} = \frac{D_m}{2\sin(\psi_{min})} = \frac{11.00}{2\sin(13.31°)} = 23.89" \quad \text{(Okay to round)}$$

  Use $R_{act} = 23.75" < 36"$ Okay

- Minimum Concave Bearing Pad Diameter (DB_{act})

$$DB_{act} = 2\left[R_{act}\left[\frac{\pi}{180}\left(\sin^{-1}\frac{D_m/2}{R_{act}}\right)\right]\right]$$

$$= 2\left[23.75\left[\frac{\pi}{180}\left(\sin^{-1}\frac{11.00/2}{23.75}\right)\right]\right] = 11.10" \quad \text{(Do not round)}$$

- Minimum Metal Depth (M_m) of Concave Surface

$$M_m = R_{act} - M_m = R_{act} - \left[R_{act}\cos\left(\left(\frac{DB_{act}}{2R_{act}}\right)\left(\frac{180}{\pi}\right)\right)\right] + \text{PTFE Thickness}$$

$$M_m = 23.75 - \left[23.75\cos\left(\left(\frac{11.10}{2(23.75)}\right)\left(\frac{180}{\pi}\right)\right)\right] + 0.09375" = 0.739" \text{ (Do not round)}$$

- Minimum Metal Thickness at Centerline, (T_{min})

$$T_{min} = 0.75"$$

- Maximum Metal Thickness, (T_{max})

$$T_{max} = T_{min} + M_m + 0.125 = 0.75 + 0.739 + 0.125 = 1.61 \sim 1.625" \quad \text{(Round up)}$$

- Length and Width (L_{cp}) of Concave Plate

$$L_{cp} = D_m + 1.125 = 11.00" + 1.125 = 12.125" \quad \text{(Okay to round)}$$

Convex Plate

- Minimum Angle (γ_{min}) of Convex Surface

$$\gamma_{min} = \left(\frac{DB_{act}}{2R_{act}}\right)\left(\frac{180}{\pi}\right) + \beta$$

$$\gamma_{min} = \left(\frac{11.10}{2(23.75)}\right)\left(\frac{180}{\pi}\right) + 2° = 15.39°$$

- Minimum Convex Chord (C_m) Length

$$C_m = 2\left[R_{act}\left(\sin\left(\gamma_{min}\right)\right)\right]$$

$$C_m = 2\left[23.75\left(\sin(15.39)\right)\right] = 12.61" \quad \text{Say } 12.625" \quad \text{(Okay to round)}$$

- Height of Convex Spherical Surface (H)

$$H = R_{act} - \sqrt{R_{act}^2 - \left(\frac{C_m}{2}\right)^2}$$

$$H = 23.75 - \sqrt{23.75^2 - \left(\frac{12.625}{2}\right)^2} = 0.854" \sim 0.85"$$

- Overall Height of Convex Plate (H_{act})

  $H_{act} = H + 0.75$

  $H_{act} = 0.85 + 0.75 = 1.60"$

- Minimum Vertical Clearance (c)

  $c = 0.7 L_{cp}\beta + 0.125$ (β is in radians)

  $c = 0.7(12.125)\left(2°\left(\frac{\pi}{180}\right)\right) + 0.125 = 0.42"$ minimum required

  Actual vertical clearance provided is greater than 0.50" (0.75 inch vertical sides on the convex plate are recessed 0.25 inch into masonry plate).

Sole Plate

- Longitudinal Length of Plate (L_{sp})

  $L_{sp} = L_{cp} + L_{max}$ (total) $+ L_{oL}$

  $L_{cp} = 12.125$ (Concave Plate)

  Temperature movement = (1.5) (2) (0.0000060) (35°F) (431') (12 in/ft) = ±3.26"

  P/S shortening = (0.70) (0.10 ft/100 ft) (431') (12 in/ft) = 3.62"

  Seismic Movement = ±3.0"

  $L_{max} = 3.26 + 3.62 + 2(3.0) = 12.88"$

  $L_{oL} = 2\ (1.0) = 2.0"$ (Edge distance)

  $L_{sp} = 12.125 + 12.88 + 2.0 = 27.00"$

Notes: 1) Thermal movement was multiplied by 2 because 35°F is rise or fall temperature.

2) Thermal movement was multiplied by 1.5 because it is not always possible to place the sole plate at a "mean" temperature.

3) Position sole plate to account for one directional movement of P/S shortening.

4) Approximately 70% of P/S shortening remains at time of hinge closure pour (see Attachment 1).

- Transverse Width of Sole Plate (W_{sp})

$W_{sp} = L_{cp} + T_m + L_{oT}$

$L_{cp} = 12.125"$

$T_m = \pm 1.0"$ (Seismic)

$L_{oT} = 2\ (1.0) = 2.0"$ (Edge distance)

$W_{sp} = 12.125 + (2)(1.0) + 2.0 = 16.125"$ Say 16.00"

- Plate Thickness (T_{sp})

Design in accordance with AISC design procedure for column base plates.

$L_{sp} = 27.00"$

$W_{sp} = 16.00"$

$f'_c = 4$ ksi $F_y = 36$ ksi

$f_b = 0.30 f'_c \sqrt{A_2 / A_1} \leq 0.60 f'_c$ (Ref. BDS, Article 8.15.2.1.3)

Assume for this example that $A_2/A_1 = 1.5$

Maximum bearing pressure (f_b) on loaded area

$f_b = 0.30 \times 4{,}000 \times \sqrt{1.5} = 1{,}470$ psi

Determine Required Plate Area

$$\frac{321{,}000}{1{,}470} = 218.37 \text{ in.}^2$$

Since the length of the sole plate was determined for sliding purposes, determine the required length to distribute the load to the concrete.

$$\frac{218.37}{16.0} = 13.65"$$

Use plate size of 16" × 14" to design thickness.

Actual bearing pressure (f_b) on loaded area

$$f_b = \frac{321{,}000}{14 \times 16} = 1{,}433 \text{ psi} < 1{,}470 \quad \text{Okay}$$

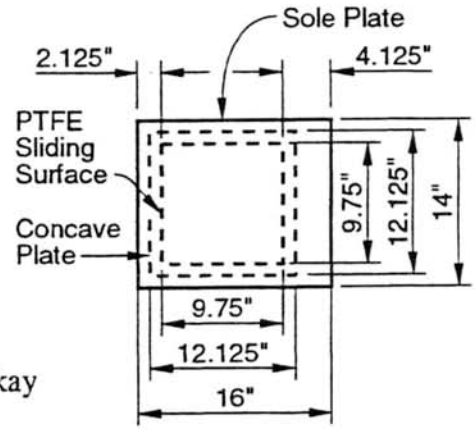

Design Model

Note: Model shows 1" transverse movment (T_m).

Determine Plate Thickness

$$T_{sp} = 2n\sqrt{\frac{f_b}{F_y}} \qquad \text{(AISC 3-106, 9th Edition)}$$

$$T_{sp} = 2(4.125)\sqrt{\frac{1{,}433}{36{,}000}} = 1.65 \quad \text{use } 1.75" > 0.75 \text{ minimum}$$

- Anchorage

  Since structure is cast-in-place P/S, use shear studs.

- Bevel

  Bevel is not required for cast-in-place concrete.

Masonry Plate

Design in accordance with AISC design procedure for column base plates.

$C_m = 12.625"$

$f_b = 1{,}470$ psi $\quad (A_2/A_1 = 1.5)$

$f'_c = 4{,}000$ psi

- Determine Required Area

Area $= W_{mp} \times L_{mp}$

$$\frac{321{,}000}{1{,}470} = 218.37 \text{ in.}^2 = 14.78" \times 14.78"$$

Use 15" × 15" plate

$W_{mp} = 15"$

$L_{mp} = 15"$

Actual Bearing Pressure (f_b) on Loaded Area

$$f_b = \frac{321{,}000}{15^2} = 1{,}427 \text{ psi} < 1{,}470 \quad \text{Okay}$$

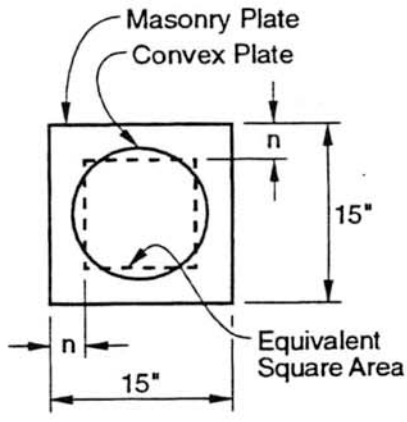

- Determine Plate Thickness

$$T_{mp} = 2n\sqrt{\frac{f_b}{F_y}}$$

Convert convex plate area to equivalent square to determine (n)

$$\text{Area Convex Plate} = \frac{\pi(12.625)^2}{4} = 125.19 \text{ in.}^2$$

$125.19 \text{ in.}^2 = 11.19" \times 11.19"$

$n = (15" - 11.19)/2 = 1.91"$

$$T_{mp} = (2)(1.91)\sqrt{\frac{1,427}{36,000}} = 0.76" + \text{recess depth}$$

$T_{mp} = 0.76 + 0.25 = 1.01"$ use 1.00" plate

- Anchorage

  Since structure is cast-in-place, use shear studs

- Determine Total Bearing Height (A_h)

  $A_h = T_{mp} + H_{\text{act}} - 0.25 + T_{\min} + T_{sp} + 2(\text{PTFE thickness}) + (\text{sole plate stainless thickness})$

  $= 1.00 + 1.60 - 0.25 + 0.75 + 1.75 + 2(0.09375) + 0.060$

  $= 5.10"$

  Notes: Actual bearing thickness may vary slightly depending on the thickness of the PTFE, substratum, and stainless steel used. Minimum and maximum values are given in the *Standard Special Provisions*.

  Use Bridge Standard Detail Sheet XS 12-80 if possible (see Attachment 4).

PTFE/Elastomeric Bearings

General

PTFE/elastomeric bearings designed in accordance with *Bridge Design Specifications*, Sections 14 and 15 should be considered for use only when the practical limits of reinforced elastomeric bearing pads have been exceeded.

The PTFE/elastomeric bearing concept and design procedure covered in this section was adopted with few exceptions from Ted Jensen's paper titled "Elastomeric/TFE Bearings", (October 1987).

The basic PTFE/elastomeric bearing design is simply comprised of PTFE disks sliding on stainless steel surfaces to accommodate the longitudinal movements and elastomeric bearing pads to accomodate the rotational movements (see Figure 10, page 58).

PTFE/elastomeric bearings are suitable for structures with moderate to large longitudinal translations, and relatively small rotations. This non proprietary bearing is simple to design and fabricate. Good performance can be attained with careful attention to loading, rotation and the physical properties/limitations of the manufacturing materials.

PTFE/Elastomeric Bearing Components

PTFE/elastomeric bearings are comprised of five basic components: (1) sole plate, (2) PTFE disk, (3) intermediate plate, (4) elastomeric bearing pad and (5) masonry plate. The function of the five components mentioned above, and the typical manufacturing materials are as follows, (see Figure 10, page 58):

- *Sole Plate* – Transfers superstructure loads to the bearing and provides a stainless steel sliding surface for super structure translation. The sole plate is fabricated from A36/A36M steel and has a stainless steel surfacing. The stainless steel surface is bonded to the sole plate with epoxy resin and stainless steel cap screws, or by perimeter welding.
- *PTFE Disk* – Provides a low friction sliding surface for the sole plate. The PTFE disk is manufactured from 100 percent pure virgin unfilled dimpled sheet resin. The PTFE disk must be recessed one-half its thickness to control cold flow.
- *Intermediate Plate* – Transfers loads from PTFE disk to elastomeric pad. The intermediate plate is manufactured from A36/A36M steel.

- *Elastomeric Bearing Pad* – Allows rotation of the superstructure while maintaining 100 percent contact between the PTFE disk and the sole plate. The steel reinforced elastomeric bearing is fully vulcanized to the steel plates. Fabric reinforced pads are not allowed.
- *Masonry Plate* – The masonry plate transfers load from the elastomeric bearing pad and anchors the bearing to the seat. The masonry plate is fabricated from A3/A36M steel.

Design Requirements

PTFE/elastomeric bearings are designed in accordance with *Bridge Design Specifications*, Sections 14 and 15. All loads are service loads. Minimum vertical loads are for dead loads and superimposed dead loads. Maximum vertical loads are for dead loads, superimposed dead loads and live loads (no impact).

Unfilled PTFE sheet resin stresses are limited to 3,500 psi maximum. The design coefficient of friction varies from 0.08 to 0.04 at bearing pressures of 500 psi and 3,500 psi respectively.

Steel reinforced elastomeric bearing pads with shape factors ≥ 7.5 may be loaded to a maximum stress of 1,000 psi. The shear modulus (G) used for design is 100 psi.

Design Guidelines

PTFE surfaces should be loaded to a minimum of 2,000 psi (*DL* only) for optimum performance. A design coefficient of friction of 0.06 is recommended for designs with bearing pressures from 2,000 psi to 3,500 psi. Actual lubricated friction values are lower; however, they should not be used for design because the long term effects of the grease are unknown.

A minimum and maximum PTFE thickness of 3/16 inch and 1/4 inch respectively should be shown on the contract plans; as the limits are not specified in the *Standard Special Provisions*.

To reduce rotational stresses, orient rectangular bearings so the long side is parallel to the axis about which the largest rotation occurs.

A bearing pad with a low shape factor accomodates rotation most readily, and a bearing pad with a high shape factor is best for resisting compresssion.[1] Therefore, the best choice represents a compromise between the two. A minimum shape factor of 7.5 is recommended.

Design Procedure

Elastomeric Bearing Pad

1. Determine the width (W) and length (L) of the elastomeric pad for the applied vertical load ($DL + LL$ not including impact) using an allowable unit stress of 1,000 psi.[5] To use 1,000 psi the shape factor (S) ≥ 7.5.

$$\frac{DL + LL}{1{,}000 \text{ psi}} = W \times L$$

2. Check the compressive strain of the elastomer due to dead load and live load from the stress/strain curves for various shape factors shown in Figure 11 (page 59). These curves, developed by the California Transportation Laboratory,[2] are based on tests of pads constructed with ½ inch layers of elastomers between steel plates meeting California specifications. To account for compressive creep of the elastomer under sustained dead load, the initial deflection from dead load is increased by 25 percent. The total deflection from dead load (DL) and live load (LL) shall not exceed 0.07 times the thickness of the elastomeric bearing.

3. Determine the initial thickness of the elastomer required for structure rotation. The structure rotation should include rotations from DL, LL, camber changes, construction tolerances and erection sequences.

   The relative rotation between top and bottom surfaces of the bearing shall be limited by:

$$L\alpha_L + W\alpha_W \leq 2\Delta_c \qquad \text{for rectangular bearings}$$

$$D\sqrt{\alpha_L^2 + \alpha_W^2} \leq 2\Delta_c \qquad \text{for circular bearings}$$

$$\Delta_c = \sum_i \varepsilon_{ci} t_i \quad \therefore \quad \Delta_c = \varepsilon_{tot} T$$

   Therefore, the elastomer thickness (T) may be determined from:

$$T \geq \frac{L\alpha_L + W\alpha_W}{2\varepsilon_{Tot}} \qquad \text{(rectangular bearings)}$$

$$T \geq \frac{D\sqrt{\alpha_L^2 + \alpha_W^2}}{2\varepsilon_{Tot}} \qquad \text{(circular bearings)}$$

L = gross length of rectangular bearing parallel to the longitudinal axis of the bridge (in.)

W = gross width of rectangular bearing perpendicular to longitudinal axis of the bridge (in.)

D = gross diameter of circular bearing (in.)

α_L, (α_W) = relative rotation of top and bottom surfaces of bearing about an axis perpendicular, (parallel) to the longitudinal axis of the bridge (radians)

Δ_c = instantaneous compressive deflection of bearing (in.)

ε_{ci} = compressive strain of ith elastomer layer (change in thickness divided by unstressed thickness)

ε_{Tot} = total compressive strain of elastomer

t_i = thickness of ith elastomer layer (in.)

T = total elastomer thickness of bearing (in.)
= Σt_i

4. Determine the Maximum Allowable Shear Force (F_s) in the Elastomer

$$F_s = G\frac{A}{T}\Delta_s$$

Δ_s = Shear deflection of bearing (in.)

G = Shear modulus of elastomer (psi) at 73°F

A = plan area of bearing (in.^{2})

The maximum allowable shear force in the elastomer must be greater than the maximum lateral force required to slip the PTFE disk under dead load (see Figure 12, page 60).

Note that the shear modulus (G) decreases with increasing temperature and increases with decreasing temperature. A value of 100 psi is recommended for this calculation.

The maximum shear deflection (Δ_s) in the elastomer shall be limited by:

$$T \geq 2\Delta_s$$

If the maximum allowable shear force is exceeded, the area of the elastomeric pad may be increased to provide greater shear capacity. It is evident from the above formulas that the elastomer design is sensitive to both the shear modulus and the friction force transmitted through the stainless steel sliding surface.

PTFE Disk

1. Determine the area of the PTFE disk required to support vertical loads, ($DL + LL$, no impact), using a 3,500 psi maximum compressive stress. Note that the allowable compressive stress for the PTFE is 3.5 times the allowable stress for the elastomer. To minimize the thickness of the intermediate plate in which the PTFE is recessed, the length, width or radius of the PTFE should be such that the edge distance is held to a minimum. A 2,000 psi to 2,500 psi (DL only) design compressive stress on the PTFE should provide a reasonable intermediate top plate thickness.

   PTFE disks are recommended to facilitate fabrication of the recess in the steel intermediate plate.

2. Calculate the Lateral Force (F_f) required to slip the PTFE disk under Dead Load.

   $F_f = \mu N$

   μ = friction coefficient

   N = Dead Load

   The friction values given in the "PTFE Sliding Surfaces" section and Article 15.2.7 of the *Bridge Design Specifications* should be used for this calculation. Note that the actual coefficient of friction will probably be less because the stainless steel slider plate will be coated with silicone grease. Initial coefficients of friction as low as 1 to 2 percent were observed by the Transportation Laboratory on greased samples loaded to 3,170 psi. However, these low friction values should not be used for design because the long term affects of the silicone grease are not known.

3. Compare the Maximum Allowable Shear Force (F_s) in the elastomer with the Lateral Force (F_f) required to slip the PTFE under Dead Load.

   $F_s \geq F_f$

Intermediate Plate

1. Size the intermediate plate, length and width to match the dimensions of the elastomeric bearing pad.

2. Determine required plate thickness. Design in accordance with AISC design procedure for column base plates. Suggestion—convert PTFE disk area to equivalent square area to design plate thickness.

Sole Plate

The sole plate must be sized so that it remains in full contact with the PTFE disk under all loading conditions.

The safety overhang (L_o) provides a minimum edge distance and allows for additional sliding surface beyond the calculated movement. The value reflects the certainty or uncertainty of the total movement calculation.

D_D = Diameter of PTFE disk
L_{max} = Maximum longitudinal movement, (including: creep, shrinkage, post tensioning, thermal effects and seismic).
T_m = maximum transverse movement
L_o = safety overhang

1. Longitudinal Length (L_{sp}) and Transverse Width (W_{sp}) of Sole Plate

$$L_{sp} = D_D + L_{max}\,(\text{total}) + L_{oL}$$

Single Disk

$$W_{sp} = D_D + T_m + L_{oT}$$

2. Plate Thickness (T_{sp})

Design in accordance with AISC design procedure for column base plates when mounted on concrete. Recommended minimum thickness: 0.75 inch.

3. Anchorage may be accomplished with shear studs, bolts or welding depending on the structure type. Studs smaller in diameter than ¾ inch are not recommended.

Masonry Plate

1. Size the masonry plate, length and width to match the dimensions of the elastomeric bearing pad unless a larger plate is required for anchorage.

2. A plate thickness of 0.75 inches is recommended.

3. Anchorage may be accomplished with shear studs, sleeved anchor bolts or welding depending on the structure type. Studs smaller in diameter than ¾ inch are not recommended.

Testing

Until recently our policy was to test scale bearings fabricated in the same manner as the full size bearings. The test bearings were detailed in the contract plans and tested at the Transportation Laboratory. This practice was abandoned June 1994 after it was determined that some test bearings were not representative of the actual bearings delivered to the job site.

The current specifications required that full sized PTFE bearings be proof tested and evaluated for compression and coefficient of initial static friction in the presence of the Engineer. The specifications also require that the manufacturer furnish one sample of elastomeric bearing to the Transportation Laboratory for testing. Test bearings should not be detailed in the contract plans.

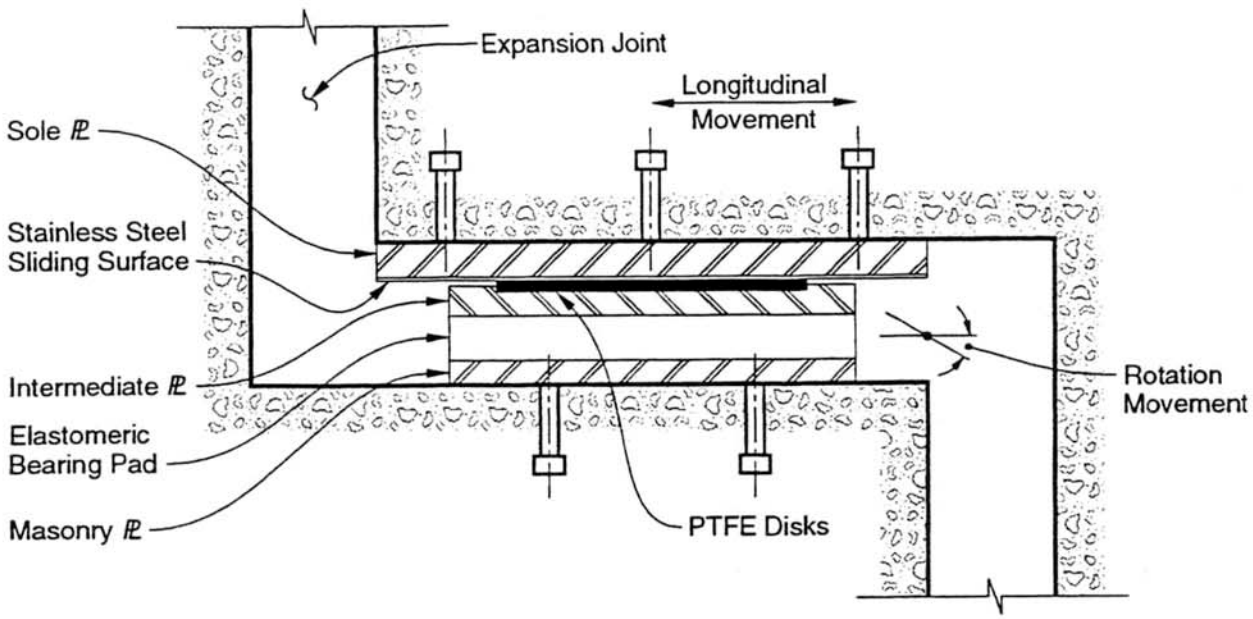

Figure 10. PTFE/Elastomeric Bearing

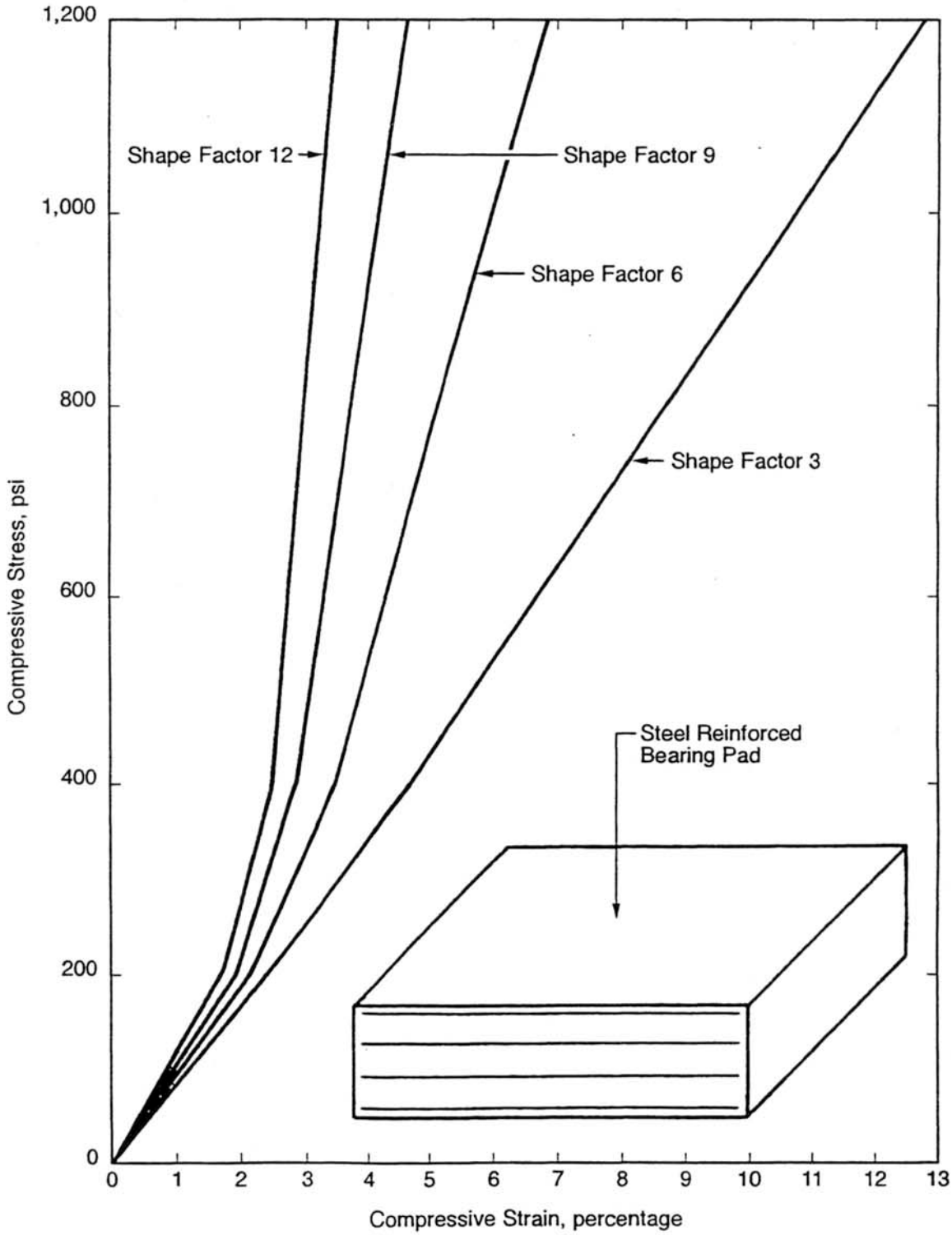

Figure 11. Recommended Compressive Stress vs. Strain Curves for Steel Reinforced Bearing Pads[2]

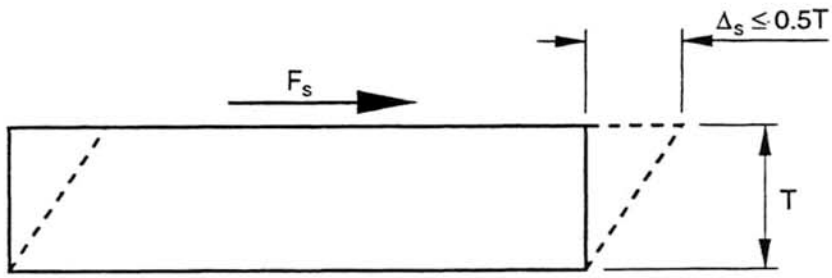

$$F_s = G\frac{A}{T}\Delta_s$$

$$T \geq 2\Delta_s$$

$$F_f = \mu N$$

$$F_f \leq F_{s\,\max}$$

F_s = shear force in elastomer

G = shear modulus (100 psi @ 70°F)

T = total elastomer thickness

Δ_s = shear deflection of bearing

F_f = force required to slip PTFE disk under DL

$N = DL$

μ = coefficient of friction

Figure 12. Shear Force in Elastomer

Example 5. PTFE/Elastomeric Bearing CIP P/S Structure

Given:

Span 3 Hinge (See Attachment 3)

Structure Length	= 785 feet
Contributory Length – 176' + 255' (CIP P/S)	= 431 feet
DL Reaction/Girder – Service Load	= 271 kips
LL Reaction/Girder – Service Load, No Impact	= 43 kips
Moderate Temperature Zone – Rise and Fall	= 35°F
f_c'	= 4 ksi
F_y	= 36 ksi

Elastomeric Bearing Pad

1. Determine Width (*W*) and Length (*L*)

$$\frac{DL + LL}{1{,}000 \text{ psi}} = W \times L \qquad \frac{271 \text{ kips} + 43 \text{ kips}}{1{,}000 \text{ psi}} = 314 \text{ in.}^2$$

Try 12" × 28" Area = 336 in.^{2} > 314 Okay

Note: Slender bearing pad selected to maximize rotation capacity.

$$\text{Shape Factor } (S) = \frac{12 \times 28}{12 + 28} = 8.4 > 7.5 \therefore 1{,}000 \text{ psi} \quad \text{Okay}$$

Actual load on elastomer:

$$\frac{271 \text{ kips} + 43 \text{ kips}}{12 \times 28} = 934 \text{ psi} \qquad (DL + LL)$$

$$\frac{271 \text{ kips}}{12 \times 28} = 807 \text{ psi} \qquad (DL)$$

2. Check Compressive Strain

$S = 8.4$, obtain strain values from the curves shown on Figure 11 (page 59).

$P_{TL} = 934$ psi $\qquad \varepsilon_{TL} = 4.4\%$

$P_{DL} = 807$ psi $\qquad \varepsilon_{DL} = 4.0\%$

$\varepsilon_{\text{Total}} = 4.4 + (4.0)(0.25) = 5.4\% < 7.0\%$ Okay

3. Determine Initial Thickness (T) for Rotation

$$T \geq \frac{L\alpha_L + W\alpha_w}{2\varepsilon_{\text{Tot}}} \qquad \text{assume } W\alpha_W \text{ negligible}$$

$$\therefore \mathrm{T} \geq \frac{\mathrm{L}\alpha_{\mathrm{L}}}{2\varepsilon_{\text{Tot}}} = \frac{(12)(0.015)}{2(0.054)} = 1.67'' \quad \text{say } 2'' \text{ (elastomer only)}$$

Structure Rotation $\qquad \beta_s = 0.003$ radians

Construction Rotation $\qquad \beta_c = 0.01$ radians

Bridge Design Specifications require 0.015 radians (minimum)

4. Determine the Maximum Allowable Shear Force (F_s) in the Elastomer

$$F_s = G\frac{A}{T}\Delta_s = 100 \times \frac{12 \times 28}{2} \times 1 = 16.8 \text{ kips}$$

$$\Delta_{s\,\max} = \frac{T}{2} = \frac{2}{2} = 1''$$

PTFE Disk

1. Determine Area of PTFE Disks

   Use Two Disk Design:

$$DL \text{ Area Required} = \frac{271 \text{ kips}}{2 \times 2{,}500 \text{ psi}} = \frac{\pi D_D^2}{4} \quad \therefore \quad D_D = 8.3''\varnothing$$

   Try $D_D = 8.5''\varnothing$

$$DL \text{ Stress on PTFE} = \frac{271 \text{ kips}}{2 \times \pi \times \frac{8.5^2}{4}} = 2{,}388 \text{ psi} > 2{,}000 \text{ psi} \quad \text{Okay}$$

$$DL + LL \text{ on PTFE} = \frac{271 + 43}{2 \times \pi \times \frac{8.5^2}{4}} = 2{,}766 \text{ psi} < 3{,}500 \text{ psi} \quad \text{Okay}$$

   Use two ¼" × 8½"∅ PTFE disks.

2. Calculate the Lateral Force (F_f) Required to Slip PTFE

   $F_f = \mu N$ $\qquad$ $\mu = 0.06$
   $N = 271$ kips (DL)

   $F_f = 0.06 \times 271{,}000 = 16.2$ kips

3. Compare Allowable Shear Force (F_s) with Slip Force (F_F)

   $F_s \geq F_f$ $\qquad$ 16.8 > 16.2 kips Okay

Intermediate Plate

1. Size Intermediate Plate Length (L) and Width (W), to match Elastomeric Pad Dimensions

   $L = 12"$
   $W = 28"$

2. Determine Plate Thickness (T_p)

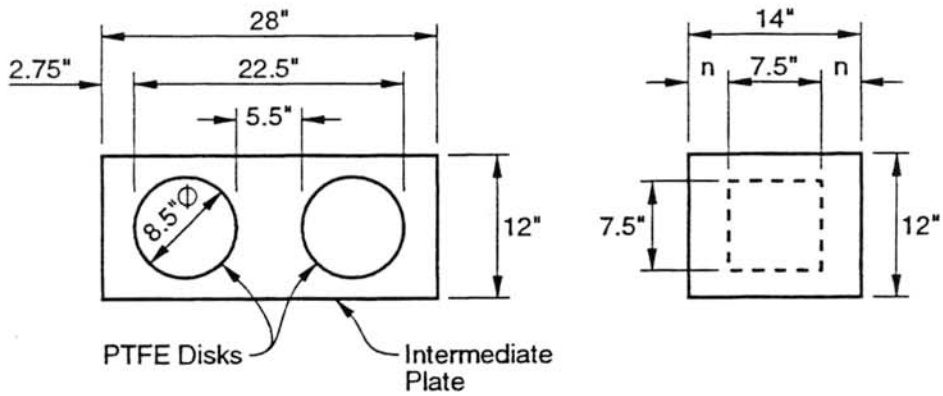

Actual Bearing **Design Model**

$$T_p = 2n\sqrt{\frac{f_p}{F_y}}$$

f_p = Actual bearing pressure on elastomer
F_y = Steel yield strength
$F_b = 0.75\ F_y$

Model – Convert Disk to Equivalent Square to Determine (n)

$$f_p = \frac{271\text{ k} + 43\text{ k}}{12 \times 28} = 934\text{ psi}$$

$$n = \frac{14 - 7.5}{2} = 3.25"$$

$$T_p = 2 \times 3.25 \times \sqrt{\frac{934}{36{,}000}} = 1.05$$

Total Plate Thickness (T_p) including ⅛" Recess

$T_p = 1.05 + 0.125" = 1.17"$ say 1.25" thick

Sole Plate

1. Longitudinal Length (L_{sp}) and Width (W_{sp})

Temperature movement = (1.5)(2)(0.0000060)(35°F)(431')(12 in./ft) = ±3.26"
P/S Shortening = (0.70)(0.10 ft/100 ft)(431')(12 in./ft) = 3.62"
Seismic Movement = ±3.0

L_{max} = 3.26 + 3.62 + 2 (3.0) = 12.88"
L_{oL} = 2(1.0) (Edge distance) = 2.0"
D_D = 8.5"
T_m = (Seismic) = ±1.0"
$L_{sp} = D_D + L_{max}$ (total) + L_{oL}
L_{sp} = 8.5 + 12.88 + 2 = 23.38" say 24.0"
$W_{sp} = D_D + T_m + L_o$
L_{oT} = 2(1.0) (Edge distance) = 2.0"
W_{sp} = [(2)(8.5) + 5.5] + 2 (1.0) + 2.0 = 26.5"

Notes:
1) Thermal movement was multiplied by 2 because 35°F is rise or fall temperature.
2) Thermal movement was multiplied by 1.5 because it is not always possible to place the sole plate at a "mean temperature".
3) Position sole plate to account for one directional movement of P/S shortening.
4) 70% of P/S shortening remains at time of hinge closure pour (see Attachment 1).

2. Plate Thickness (T_{sp})

Design in accordance with AISC design procedure for column base plates mounted on concrete.

$L_{sp} = 24.0"$ $W_{sp} = 26.5"$

$f_c' = 4$ ksi $F_y = 36$ ksi

$f_b = 0.30 f_c' \sqrt{A_2 / A_1} \leq 0.60 f_c'$ (Ref. BDS, Article 8.15.2.1.3)

Assume for this example that $A_2/A_1 = 1.5$

Maximum bearing pressure (f_b) on loaded area: $f_b = (0.30)(4{,}000)\sqrt{1.5} = 1{,}470$ psi

3. Determine Required Plate Area

$$\frac{271+43}{1,470} = 213.6 \text{ in.}^2$$

Since the length of the sole plate was determined for sliding purposes, determine the required length to distribute the load to the concrete.

$$\frac{213.6 \text{ in.}^2}{26.5} = 8.1" \quad \text{use disk diameter + edge distance } (8.5+2) = 10.5"$$

Design Thickness for 26.5" × 10.5" Plate

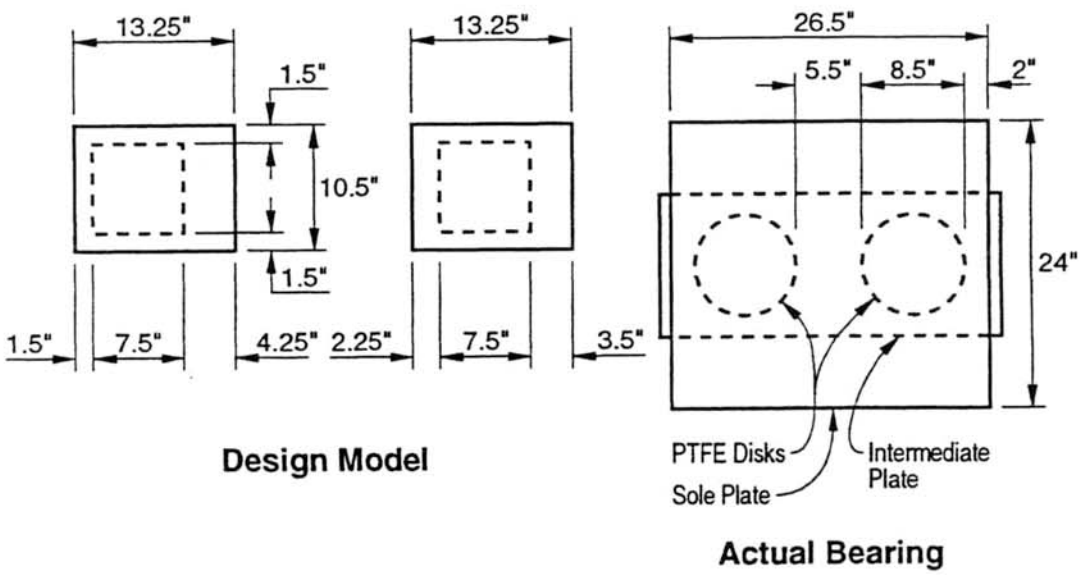

Model Information

- Convert disks to equivalent square
- 1" transverse movement (T_m) shown

f_b = Actual bearing pressure
F_y = Steel yield strength (36 ksi)
$F_b = 0.75\ F_y$

$$T_{sp} = 2n\sqrt{\frac{f_b}{F_y}}$$

$$f_b = \frac{271\text{ k} + 43\text{ k}}{2(10.5 \times 13.25)} = 1{,}128\text{ psi}$$

$$T_{sp} = 2 \times 4.25 \times \sqrt{\frac{1{,}128}{36{,}000}} = 1.50''$$

Masonry Plate

1. Size Plate Area to Match Elastomer Area

   Use 12" × 28" plate

2. Plate Thickness

   A plate thickness of ¾" is adequate since the masonry plate has the same area and load as the elastomeric pad.

   934 psi < 1,470 psi.

3. Anchorage

   Since structure is cast in place, use shear studs.

Summary of Calculations

Plan Bearings

Elastomeric Bearing Pad	2" × 1'-0" × 2'-4"
PTFE Disk (2)	¼" × 8½"∅
Intermediate plate	1¼" × 1'-0" × 2'-4"
Sole Plate	1½" × 2'-0" × 2'-2½"
Masonry Plate	¾" × 1'-0" × 2'-4"

Total Bearing Height

Sole Plate	1.50
Stainless Steel	0.060
PTFE Disk (¼" thick recessed ⅛")	0.125
Intermediate Plate	1.25
Elastomer 2 + (4)(0.075)	2.30
Masonry Plate	0.75
Total	5.99" ~ 6.0"

Floyd L. Mellon

Jerry A. McKee

RL:jgf
Attachments

References

1. AASHTO LRFD Design Specification (Version 4.02) Section 14, Joints and Bearings.

2. "An Evaluation of Fiberglass and Steel Reinforced Elastomeric Bridge Bearing Pads," dated January 1982 by the Transportation Laboratory of the State of California.

3. "A Laboratory Evaluation of Full Size Elastomeric Bridge Bearing Pads," dated June 1974 by the Transportation Laboratory of the State of California.

4. NCHRP Report 10-20A "High Load Multi-Rotational Bridge Bearings," Final Report – John F. Stanton, Charles W, Roeder, T. Ivan Campbell.

5. Caltrans "Elastomeric/TFE Bearings," by Ted Jensen, P.E., dated October 1987.

6. Caltrans QAI Newsletter No. 3, "Suggestions to Avoid Future Bridge Problems," August 3, 1992.

Attachment 1

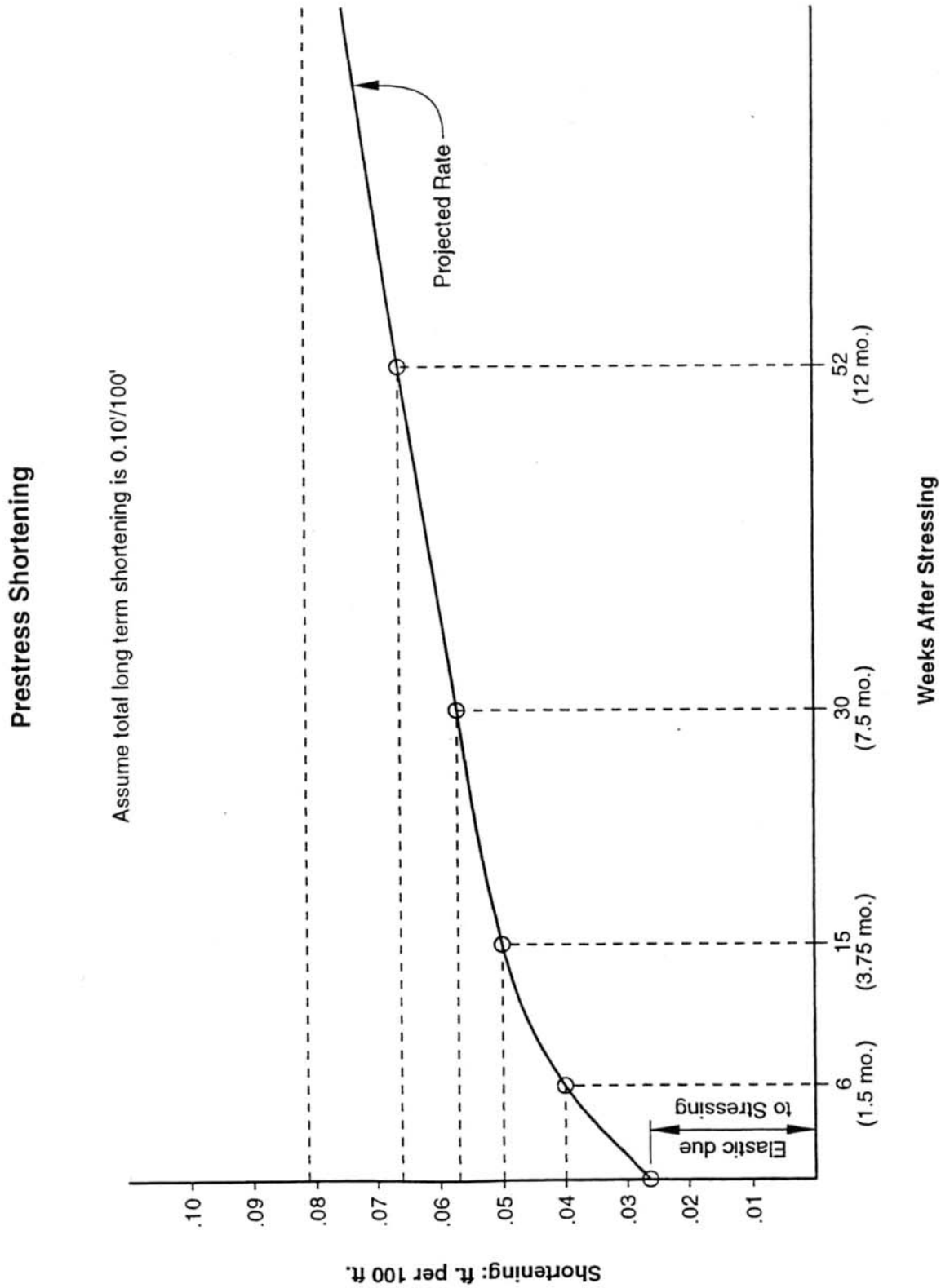

Attachment 2

Structure for Examples 2 and 3

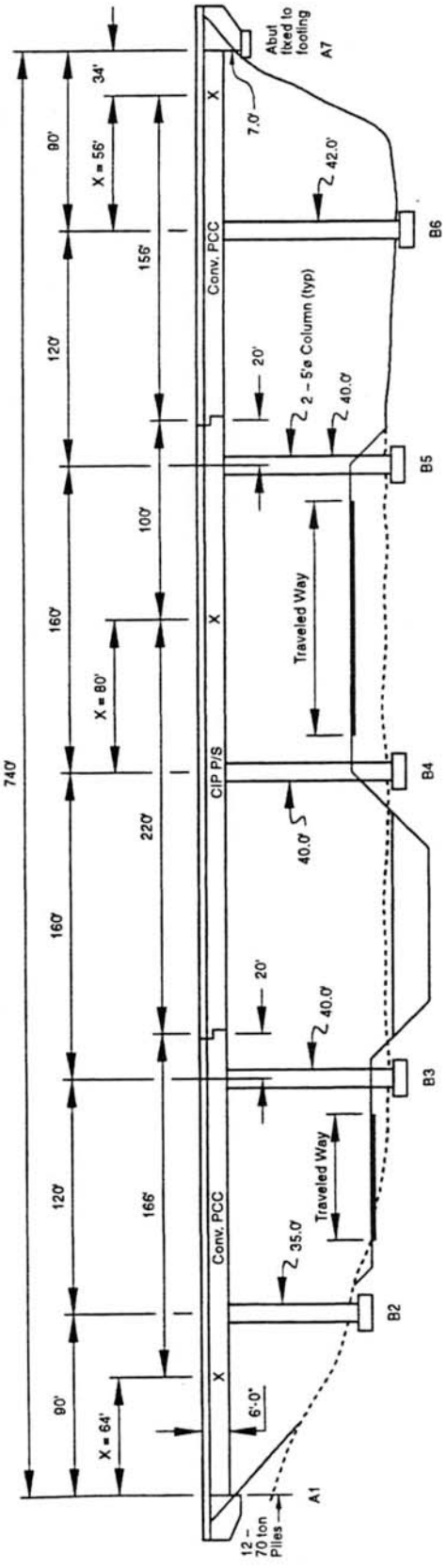

Notes:

Width of Structure	= 78'
Diameter of Column	= 5'-0"
Point of No Movement	= X
Structure Depth	= 6'-0"

Attachment 3

Structure for Examples 4 and 5

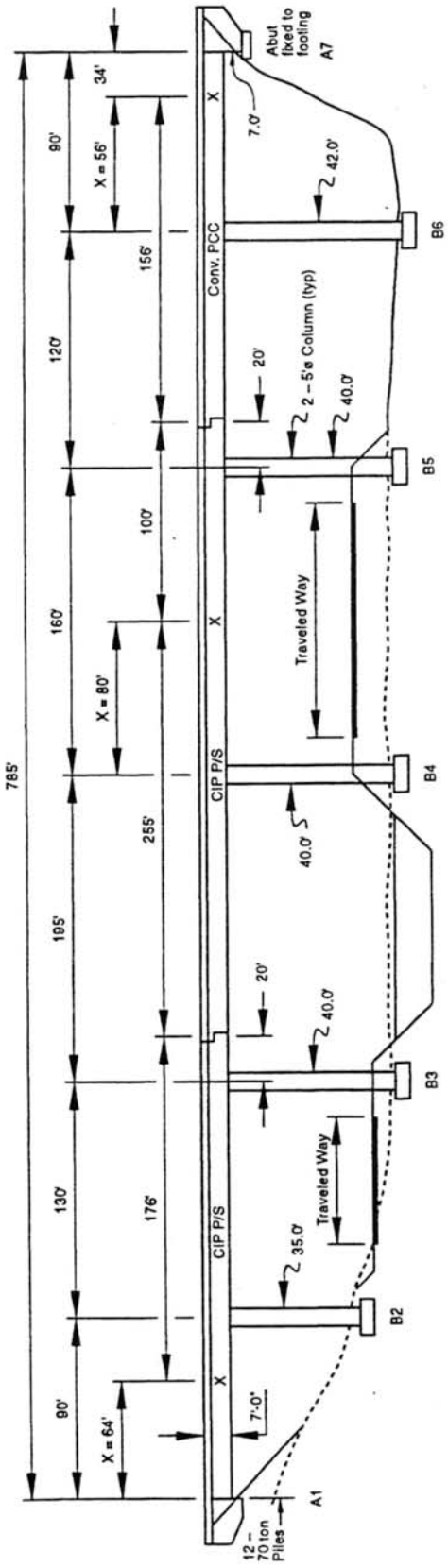

Notes: Width of Structure = 78'
Diameter of Column = 5'-0"
Point of No Movement = X
Structure Depth = 7'-0"

RELEASED 5-11-94

DIST.	COUNTY	ROUTE	POST MILES TOTAL PROJECT	SHEET NO.	TOTAL SHEETS

REGISTERED ENGINEER - CIVIL

PLANS APPROVAL DATE

REGISTERED PROFESSIONAL ENGINEER No. Exp. CIVIL STATE OF CALIFORNIA

EXPANSION BEARING TABLE

LOCATION	MAXIMUM VERTICAL LOAD (Kips)	MINIMUM DEAD LOAD (Kips)	DESIGN ROTATION (Degrees)	CONCAVE PLATE						CONVEX PLATE		MASONRY PLATE			SOLE PLATE			ASSEMBLY HEIGHT
				WIDTH / LENGTH	FLAT PTFE AREA (in^2)	DIAMETER	SPHERICAL RADIUS	MINIMUM THICKNESS	MAXIMUM THICKNESS	DIAMETER	MAXIMUM THICKNESS	WIDTH	LENGTH	THICKNESS	WIDTH	LENGTH	THICKNESS	
				L_{cp}	A_{PTFE}	D_m	R_{act}	T_{min}	T_{max}	C_m	H_{act}	W_{mp}	L_{mp}	T_{mp}	W_{sp}	L_{sp}	T_{sp}	A_h
Hinge 3	321	271	2	12.125	95	11.00	23.75	0.75	1.625	12.625	1.60	15.00	15.00	1.00	16.00	27.00	1.75	5.10

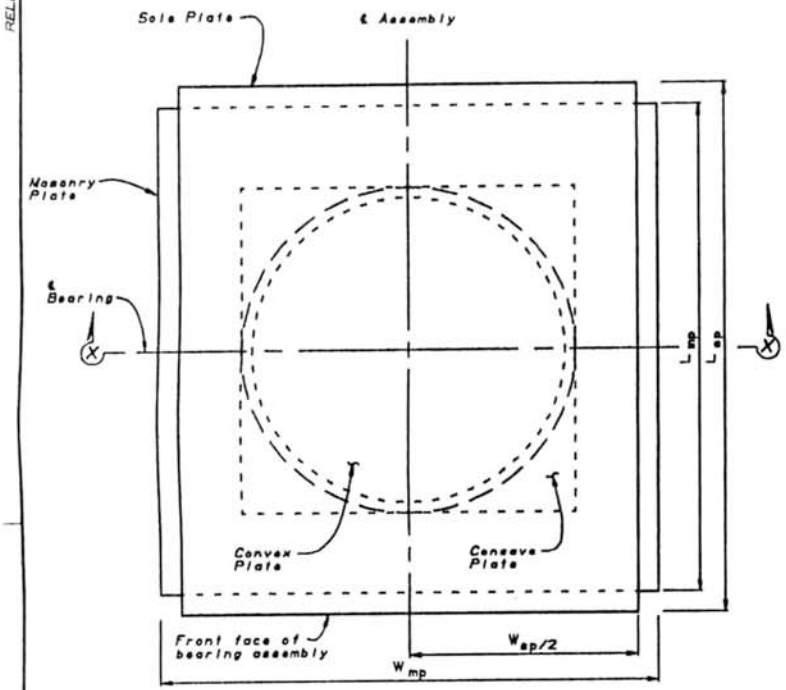

PLAN
No scale

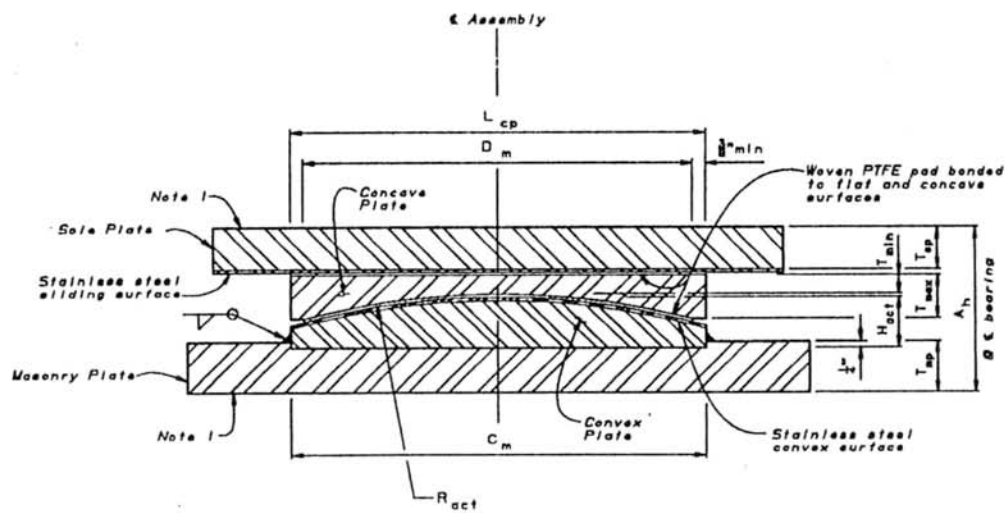

SECTION X-X
No scale

Notes:

1. Anchorage method not shown.
2. All units in inches unless otherwise noted.
3. All dimensions shown are steel only unless otherwise noted.
4. H_{act} includes stainless steel.
5. A_h includes PTFE, substratum and stainless steel, (varies).
6. R_{act} is to sliding surface.

STANDARD DRAWING

FILE NO. XS 12-80	DESIGN	BY Roberto Lacalle	CHECKED Robert E. Travis
DRAWING DATE 11/93	DETAILS	BY John Tjeelker	CHECKED Roberto Lacalle
	SUBMITTED BY Roberto Lacalle		

APPROVAL RECOMMENDED BY [signature] DESIGN SUPERVISOR

ORIGINAL SCALE IN INCHES FOR PRODUCED PLANS 0 1 2 3

STATE OF CALIFORNIA
DEPARTMENT OF TRANSPORTATION

DIVISION OF STRUCTURES
STRUCTURE DESIGN

CU
EA

ORDER NO.
POST MILE

EXAMPLE 4
PTFE/SPHERICAL EXPANSION BEARING DETAILS

DISPLAY PRINTS BEARING EARLIER REVISION DATES

REVISION DATES (PRELIMINARY STAGE ONLY)

SHEET OF

MTD 7-1 ATTACHMENT 4