STRENGTHENING STEEL GIRDER BRIDGES FOR LIVE LOADS

Introduction

With the introduction of the California permit design live load in the early 1970's, almost all steel girder bridges built before that time are now rated structurally deficient in live load capacity for permit trucks. California has established statewide routes known as "State Highway Extra Legal Load" or "SHELL" routes for permit vehicles. Steel girder bridges on these routes are in the process of being strengthened to full permit capacity.

This memo covers most design aspects of strengthening composite and noncomposite steel girder bridges.

Before starting any detailed analysis for strengthening, the designer should request the Bridge Book for that particular bridge from the Office of Structure Maintenance and Investigations. This book will have extensive information on the present and past condition of the bridge and the current operating live load rating. The designer should be aware, however, the live load rating method generally identifies one deficiency, whereas there may be other unidentified deficiencies also.

Design Method

The Load Factor Design (LFD) method shall be used in designing and analyzing steel girder bridges for live load upgradings. This method will assure that the steel girders are not stressed beyond their yield limits. The girders are to be checked for moments, shear and fatigue. The intent of strengthening steel bridges for live loads is to make sure the entire bridge superstructure is adequate. SECTION 10, STRUCTURAL STEEL, of the *Bridge Design Specifications* manual shall be used in the design of steel girder strengthenings.

Dead Loads

In calculating dead loads on steel girders the following unit weights shall be used.

Steel girders:	490 lbs/cu ft (0.2836 lbs/cu in).
Concrete decks and barrier railings:	150 lbs/cu ft.
Asphaltic Concrete overlays:	150 lbs/cu ft.

Live loads

The live loads for strengthening shall be those specified in SECTION 3, LOADS, of the *Bridge Design Specifications* manual.

New Memo

Live Load Distribution To Girders

For closely spaced girders, the standard "S-over" formulas shall be used (Group IH and IPC). For widely spaced girders, a distribution of wheel loads shall be used (Group IH and IPW).

For unusual structures, the 3-dimensional grid analysis with the CURVBRG computer program may be used. In load combination IP3D, the analysis employs a single P-truck , in a critical transverse position, or a P-truck in conjunction with one HS or Alternate Military Loading in a separate traffic lane depending upon which is most severe. In Load Combination IH, the number of lanes, and the corresponding reduction in load intensity (BDS 3.12.1) shall be such as to produce the maximum effect on the member under consideration.

Girder Analysis

Use the LFD method to determine the amount of moment overstress, if any, for each girder. For composite analysis use the following "n" values:

$$\left(n = \frac{E_s}{E_c} \right)$$

Use dead load of the steel girder and concrete deck slab to analyse stresses in the steel girder section only.
n = 30 for long term loads.(added dead loads such as barrier railings and AC overlays)
n = 10 for short term loads (live loads)

For concrete strengths less than 3000 or greater than 3900 psi see ARTICLE 10.38, of the *Bridge Design Specifications*. Refer to Memo to Designers 9-4 for a historical summary of assumed steel and concrete design strengths.

Strengthening Methods for Noncomposite Bridges

Noncomposite steel girder bridges will usually have symmetrical steel sections, that is the neutral axis is at mid-height of the girder.

The following methods of strengthening noncomposite bridges may be used:

1) Adding shear connectors to the top flange making the girder composite thereby increasing capacity for both live loads and added dead loads.
2) Adding additional cover plates to the bottom flange thus lowering the neutral axis.
3) Adding additional bracing of compression flange.
4) Post-tensioning using straight tendon paths for small overstresses.

5) Post-tensioning using harped tendon paths with inverted king posts to reduce large over stresses.
6) Inserting girders in between existing; shim and grout between top flange and deck slab soffit.

When post-tensioning noncomposite steel bridges, the top flange may be overstressed along with the bottom flange. The post-tensioning force required will usually be designed for the top flange overstresses. If this force becomes large, other strengthening methods should be investigated. See Figures 1 thru 4, Attachment A for example illustrations.

The TransLab welding unit should be consulted before deciding to use welded shear connectors. Some vintage steels are not suitable for welding or need special preparation. TransLab should provide a clearance to attach studs in accordance with CalTrans Standard Specifications, special clauses for doing the work, or recommend against this alternative.

Strengthening Methods for Composite Bridges

The preferred method of strengthening composite bridges is by post-tensioning. This method requires the use of straight strands or bars in ducts applied near the bottom flange. If there are no restrictions on vertical clearances or aesthetic appearance, place the anchorages on the bottom side of the flange or along the side of the flange.

For restrictions on vertical clearance or aesthetic appearance, attach the anchorages to the webs, but placed as close to the bottom flange as possible. Attaching anchorages to the web may require coping of stiffeners or coring holes in gusset plates.

Another method is to bolt cover plates to the bottom flanges which is usually more expensive than post-tensioning. Any attachment to the bottom flange will reduce vertical clearances. See Figures 2 and 3.

Post-Tensioning Requirements

For efficiency, the post-tensioning tendons are placed in the tension zone as far as possible from the neutral axis. Post-tensioning force shall be determined from the following formulas:

$$P_f \geq \frac{\text{overstress in tension}}{\frac{1}{A} + \frac{ey_t}{I}}$$

or

$$P_f \geq \frac{\text{overstress in compression}}{\frac{1}{A} - \frac{ey_c}{I}}$$

where P_f = effective post-tensioning force
e = tendon eccentricity from neutral axis
y_t = distance from neutral axis to the extreme tension fiber
y_c = distance from neutral axis to the extreme compression fiber
A = cross sectional area of girder
I = moment of inertia of girder

For composite girders, if the combination of dead load plus post-tensioning stress does not cause any tension on the top flange, the section properties of the composite section shall be used (i.e., n = 10).

For strands, f'_s shall be 270 ksi and for high strength rods 150 ksi. Long term losses shall be assumed to be 5 ksi minimum for strands and 3 ksi minimum for rods. The approximate area of prestress steel required shall be determined by using ($0.70\ f'_s - 5$ ksi) for strands, and ($0.70\ f'_s - 3$ ksi) for high strength rods. When using high strength rods, the size of rods should be limited to ⅝", 1" or 1¼" since these rods are readily available.

Strands should not be used in short lengths as the anchor set losses will be excessive. High strength rods have negligible anchor set losses. In preparing the project plans, where appropriate both strands and bar options should be shown on the plans.

The anchors should be placed beyond the point where there is no overstress and with sufficient clearance for using mono-strand jacking equipment.

It should be noted that prestressing in the positive moment area can reduce negative moment overstress by secondary effects in continuous bridges. However, it should also be noted that detrimental tensile stresses can be introduced in the entire superstructure for any prestressing performed if the superstructure is continuous over more than one support.

It should be noted that when a girder is stressed the bridge is generally not loaded with the controlling live loads. Post-tensioning forces in the strands or rods will increase when the design live load passes over the bridge. This design live load will increase the forces in the strands or rods and may exceed $0.8f^*_y$ at service loads after losses.

Post-Tensioning Anchorage Brackets

Bolted connections shall be designed as a bearing type connection. The bracket shape should be proportioned so that the load transfer is more in shear rather than in bending. The design loads for the brackets shall be the ultimate tensile strengths of the strands or rods (i.e., 270 ksi for strands and 150 ksi for rods). Welds for the brackets should be either fillet or full penetration type welds. Full penetration welds should be used to attach the bearing plate to the web and base plates. This will ensure that the plates are in full contact with each other. Full penetration welds should also be used for web plate to base plate attachment if the length of the web plate is controlled by the length of fillet welds. Bracket material should be A36 steel with high strength A325 bolts. Exceptions to this practice would be if the

existing bridge is A588 steel. The contact surface of the existing girders, where tendon brackets and supports are to be attached, shall be cleaned without the removal of the paint. See Figures 5 through 7 for example illustrations.

Cover Plate Analysis

The LFD method shall be used for designing cover plates and connections. Cover plates with high strength bolts shall be used to decrease girder stresses. The gross and net areas of tension flange sections should be checked. Paint on existing flanges must be removed before attaching cover plates to guarantee residual tension in torqued-bolt connections.

Shear Analysis

Shear stresses in the steel girders shall also be checked. If stiffeners are required, the new stiffeners shall be bolted or welded to the webs using angles, plates, or WT sections.

Bearing stiffeners and the existing bearings shall also be checked. If bearing stiffeners are required then additional stiffeners can be added to the existing by bolting them together. If the bearings are inadequate or require maintenance, new bearings should be provided. In case of deficient rocker bearings they should be replaced with elastomeric bearings.

The web should be investigated for principal localized web stresses at the mounted post-tensioning anchorages. The stresses due to a combination of dead, live and prestress could be catastrophic in thin, low yield webs. Stiffener plates can be bolted to the webs to distribute localized stresses.

Fatigue Analysis

Fatigue analysis for existing bridges is a complex problem since the historic load data, Average Daily Truck Traffic (ADTT), is not readily available making prediction of the remaining fatigue life very difficult. Therefore fatigue stress checks should be performed as specified in the *Bridge Design Specifications* manual, SECTION 10.3.1. NCHRP Report No. 299, "Fatigue Evaluation Procedures for Steel Bridges", may be used in determining the fatigue life.

Required Specifications

Office of Structure Maintenance and Investigations and the Structures' Aesthetic group shall be consulted to determine whether the attachment shall be galvanized or painted. All strand type systems shall be encased in steel conduit and grouted after stressing. All strand anchorages and anchor heads shall be sealed with grout using permanent grout caps. Slip joints near the anchorages shall be shown on the plans to allow contraction of the conduit during stressing.

Unusual Strengthening

If a designer is faced with an unusual live load strengthening project, the Strengthening Specialist or the Steel Committee should be consulted in the early stages of design to help the designer in determining the best method(s) available.

Floyd L. Mellon

Guy D. Mancarti

RCA:jgf
Attachments

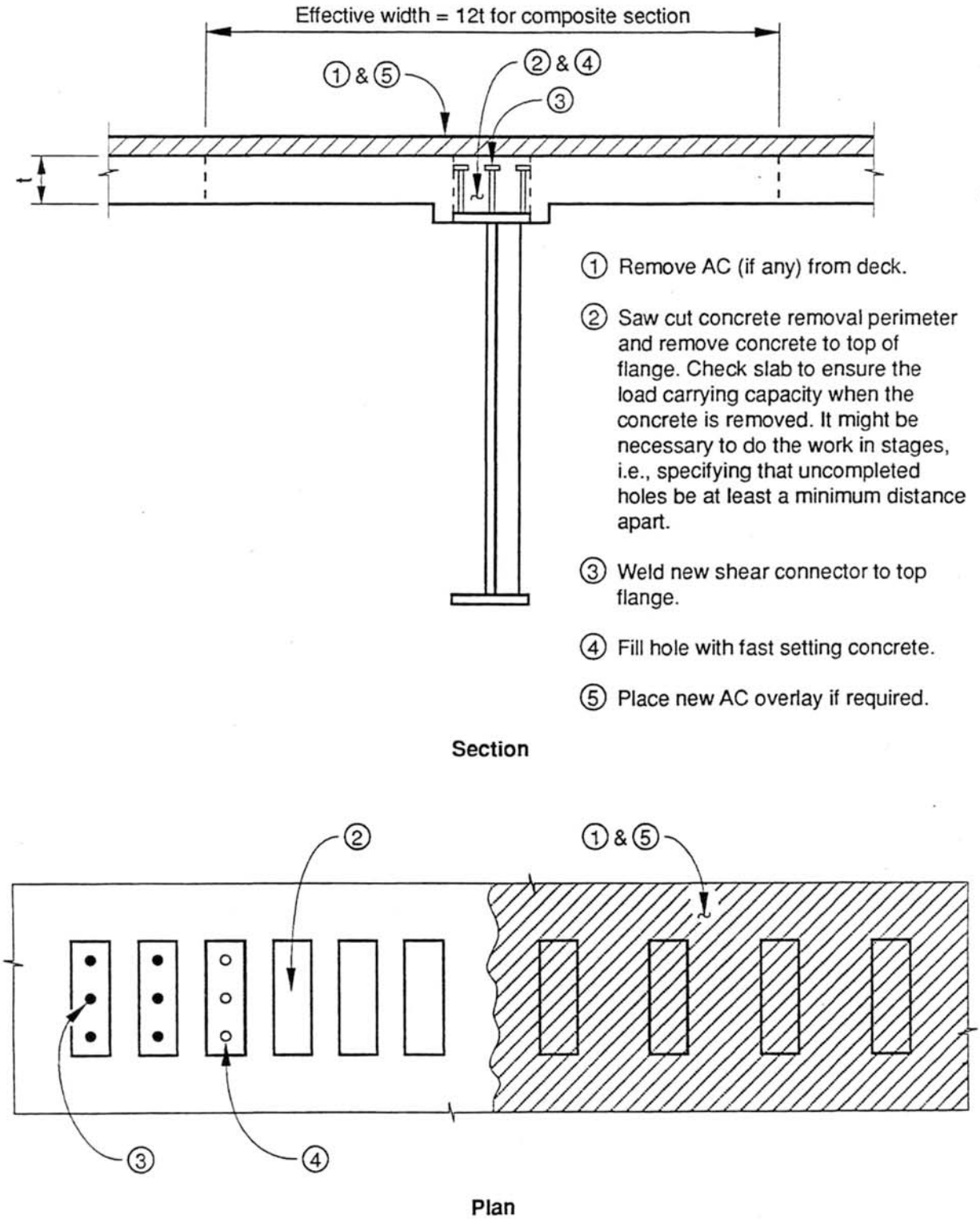

Figure 1. Strengthening by Adding Shear Connectors

Attachment A, Page 2 of 7

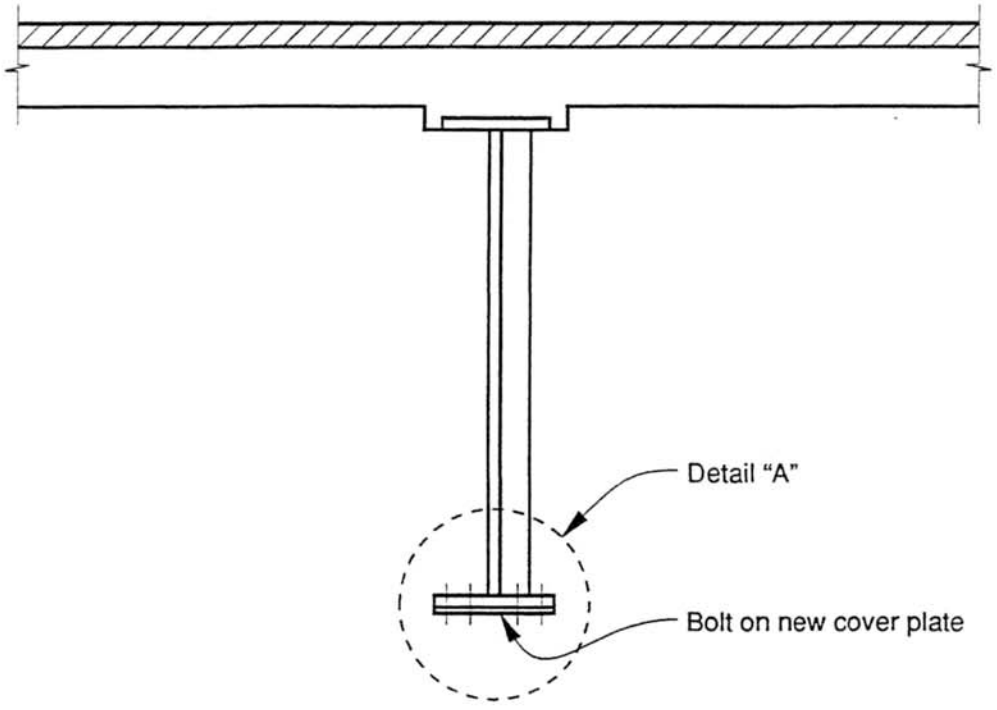

Section

Note: It may be advantageous, or necessary for design purposes, to shore the bridge during the cover plate installation. Shoring can reduce traffic deflections and or reduce dead load stresses and allow plates to be more effective.

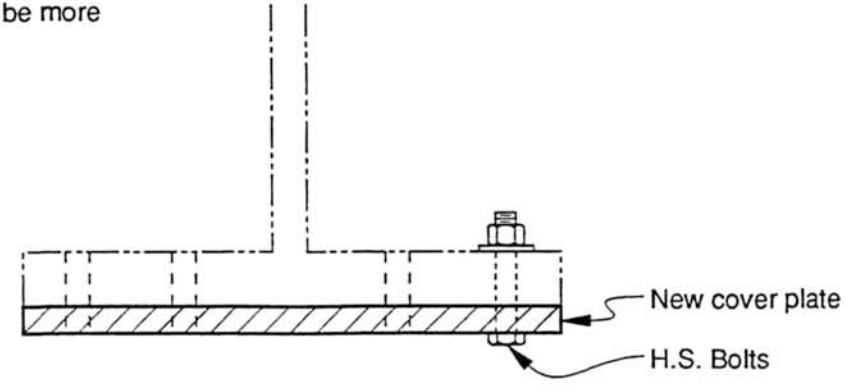

Detail "A"

Figure 2. Strengthening by Cover Plates

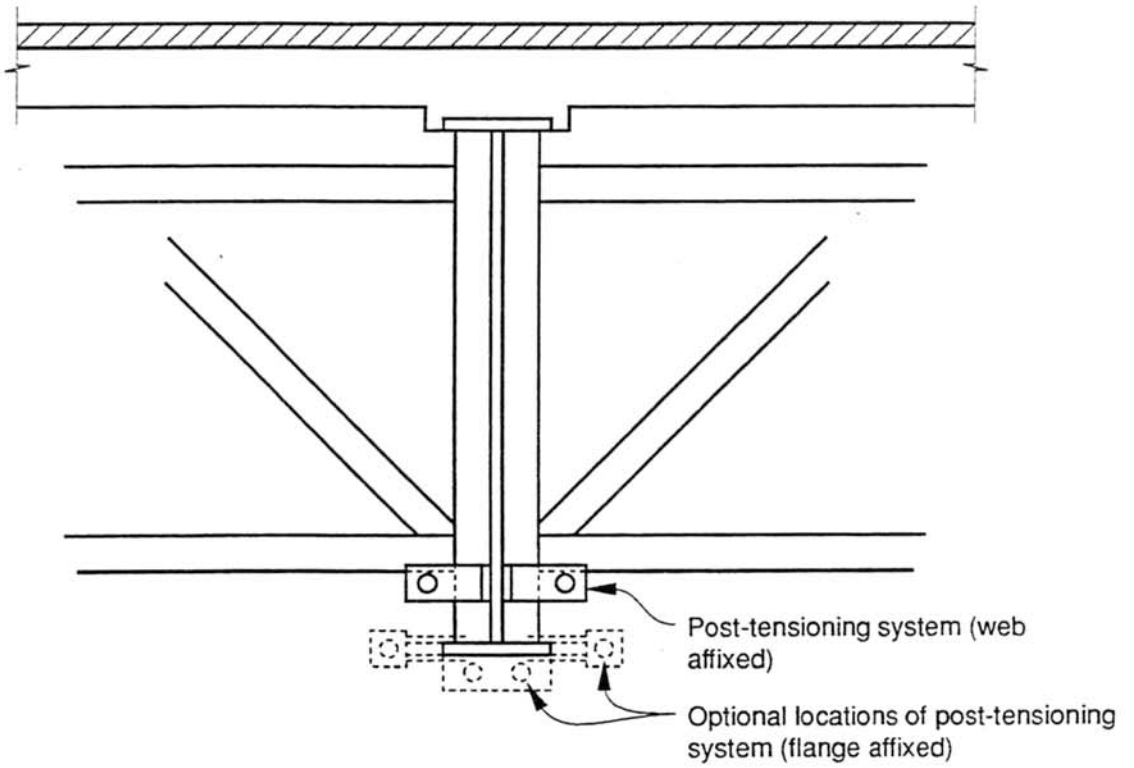

Section

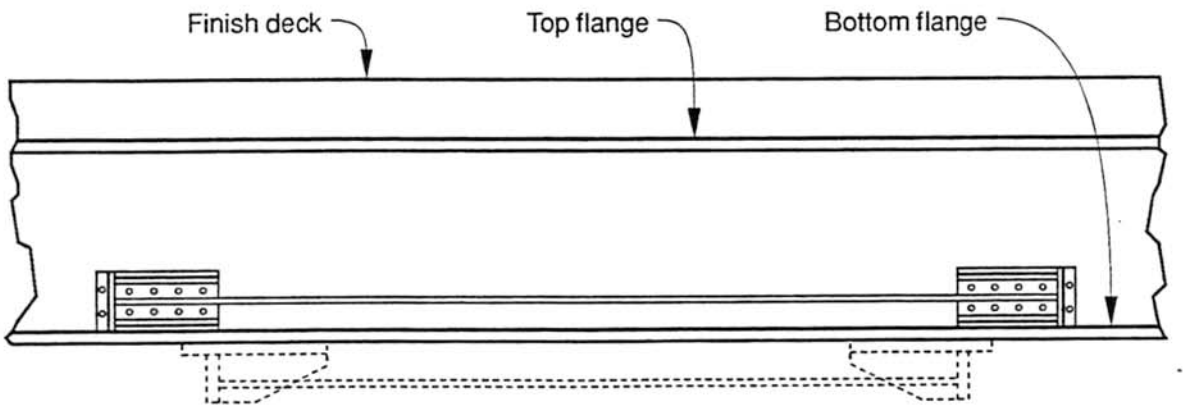

Girder Elevation

Figure 3. Strengthening by Post-Tensioning

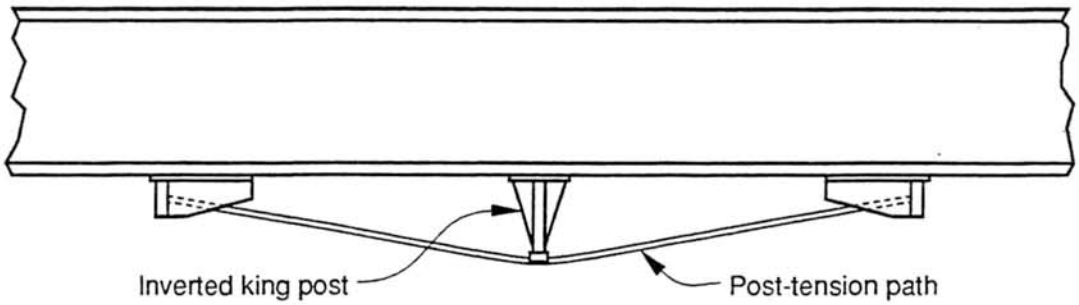

Girder Elevation

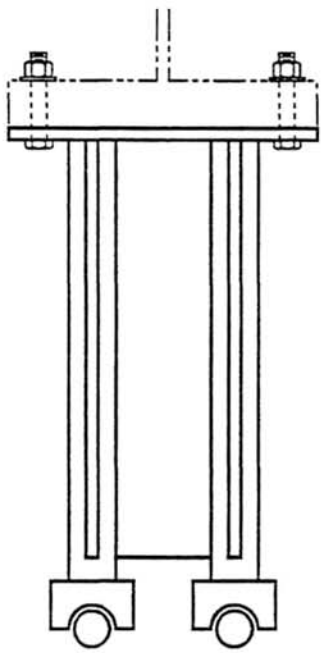

King Post Section

Figure 4. Strengthening by Post-Tensioning Using King Post

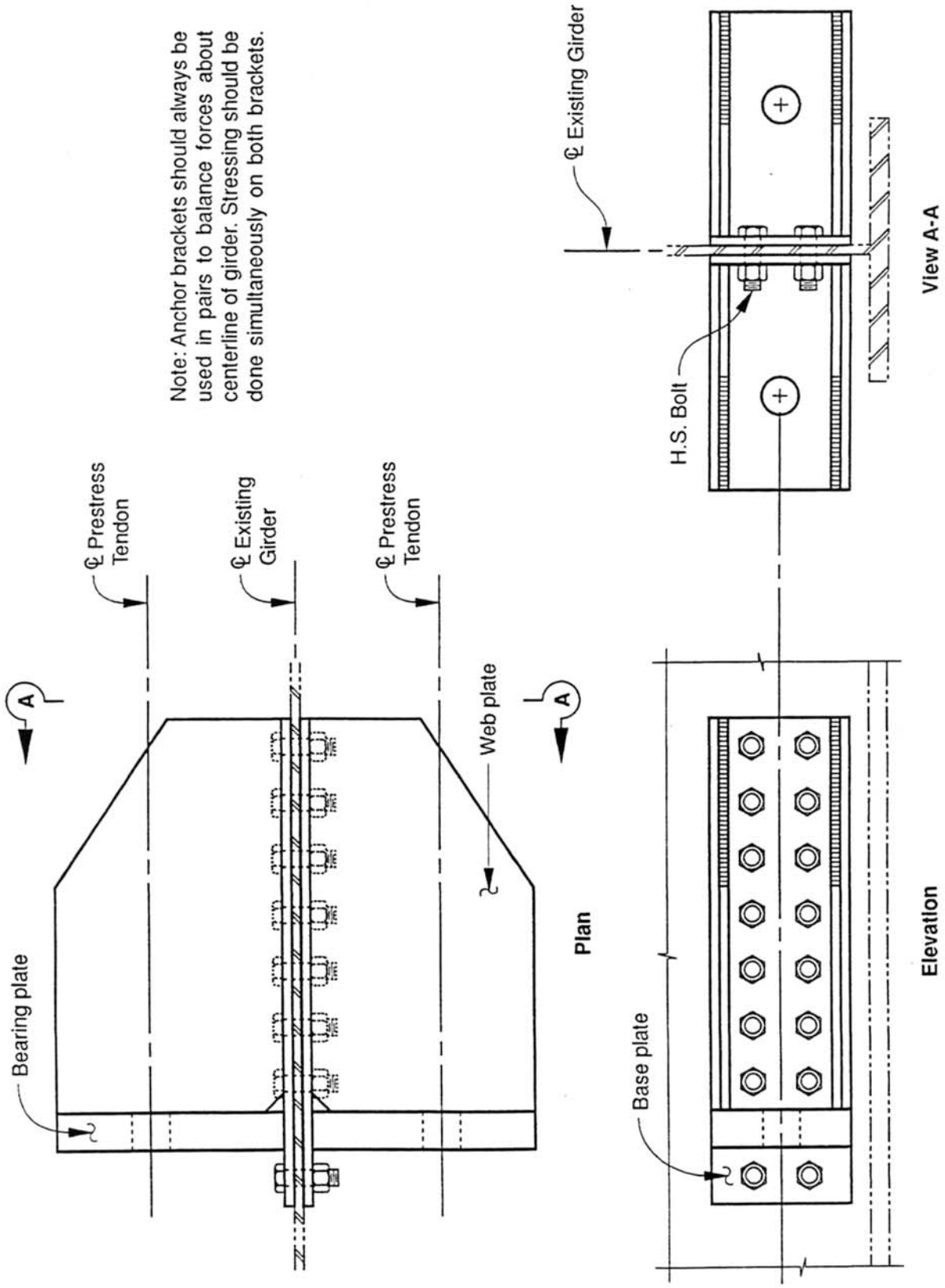

Figure 5. Girder Web Anchorage Bracket

Attachment A, Page 6 of 7

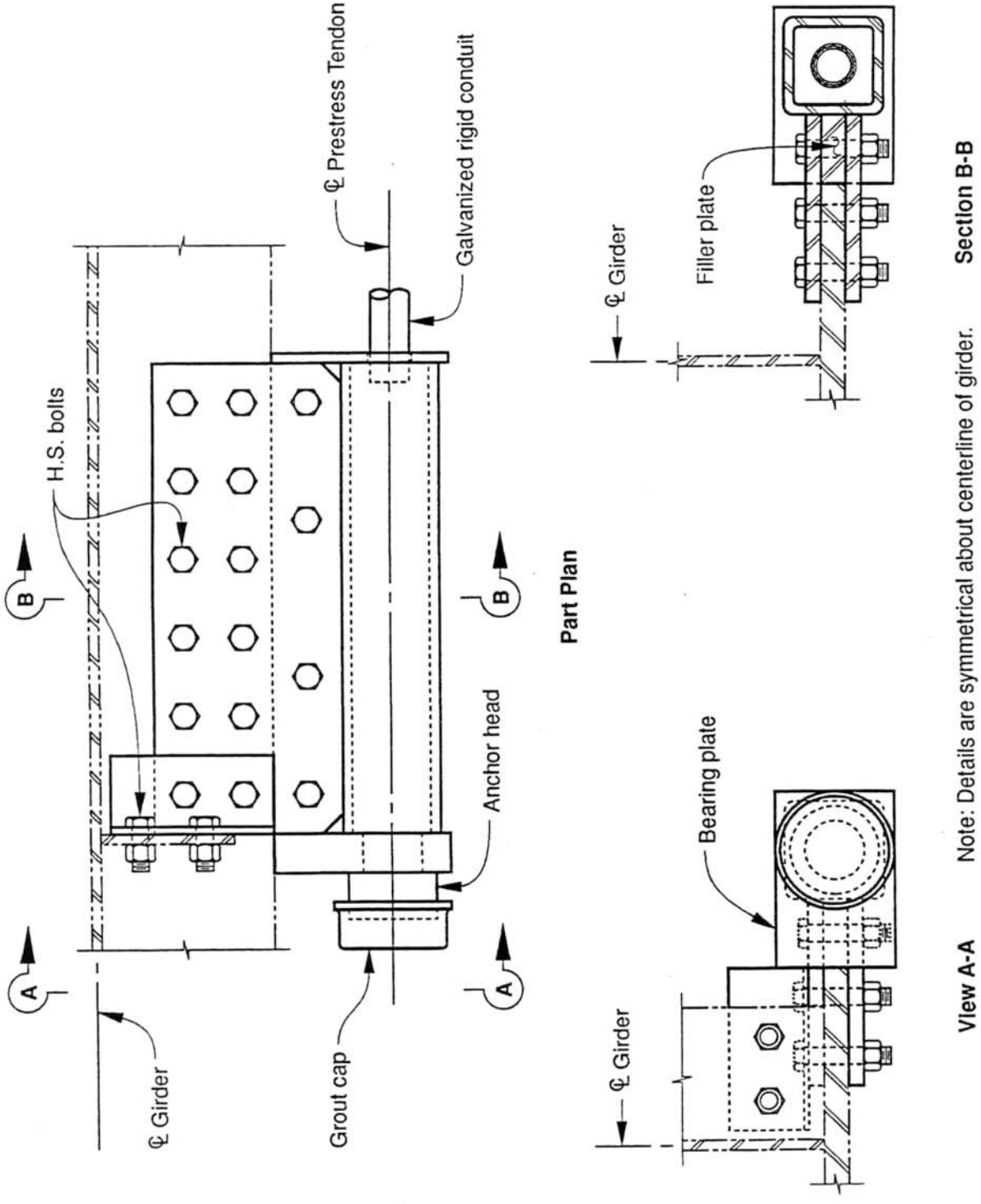

Note: Details are symmetrical about centerline of girder.

Figure 6. Girder Flange Anchorage Bracket (Side Flange Mount)

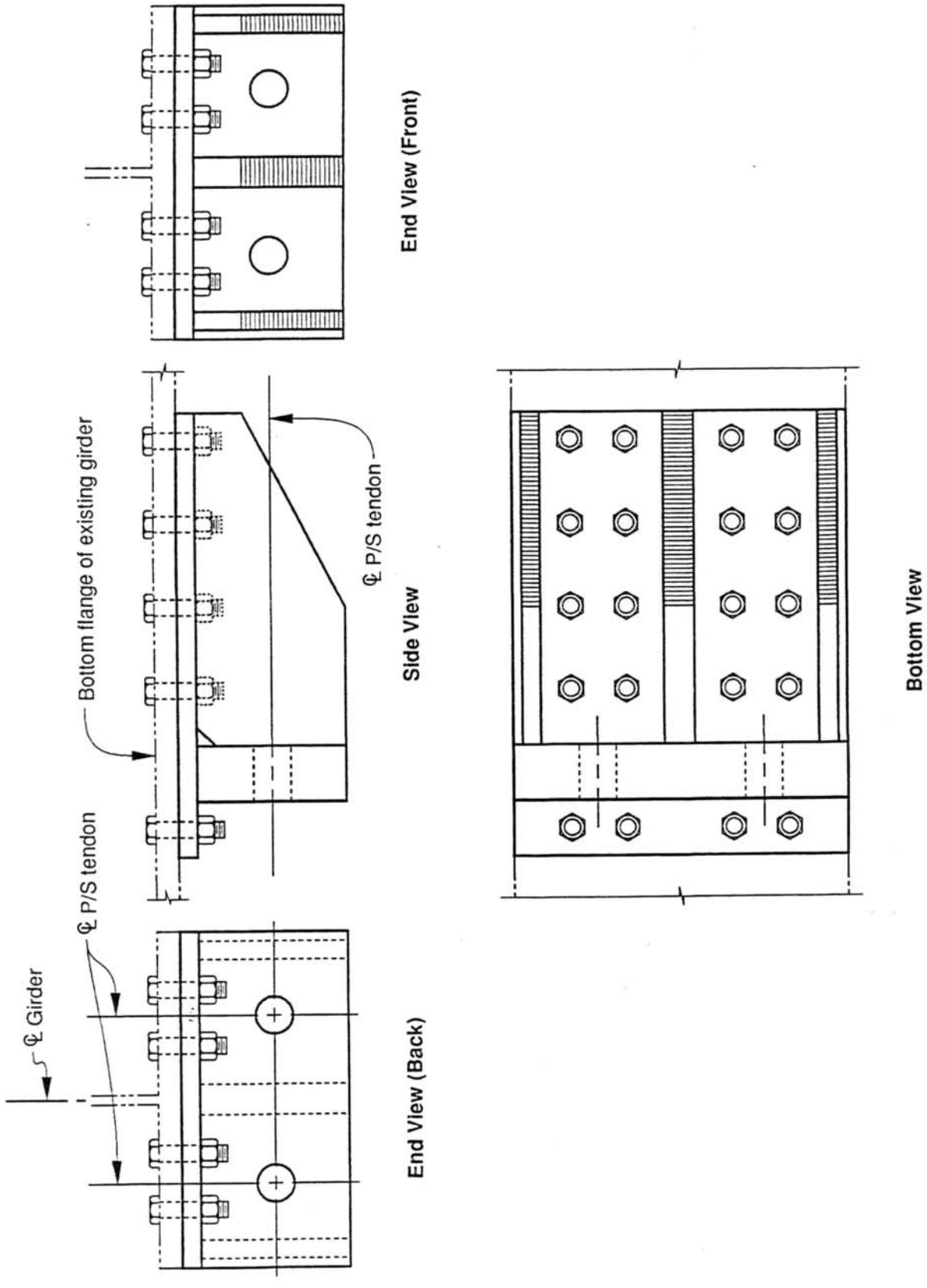

Figure 7. Girder Flange Anchorage Bracket (Bottom of Flange Mount)