ROAD REPAIR AND ACCOUNTABILITY ACT OF 2017
PROJECT BASELINE AGREEMENT
Trinidad CAPM Project (EA 01-0F820)

Resolution SHOPP-P-1920-02B
(will be completed by CTC)

1. FUNDING PROGRAM

- ☐ Active Transportation Program
- ☐ Local Partnership Program (Competitive)
- ☐ Solutions for Congested Corridors Program
- ☒ State Highway Operation and Protection Program
- ☐ Trade Corridor Enhancement Program

2. PARTIES AND DATE

2.1 This Project Baseline Agreement (Agreement) for the *Trinidad CAPM Project (EA 01-0F820)*, effective on, 10/9/19 (will be completed by CTC), is made by and between the California Transportation Commission (Commission), the California Department of Transportation (Caltrans), the Project Applicant, *Caltrans*, and the Implementing Agency, *Caltrans*, sometimes collectively referred to as the "Parties".

3. RECITAL

3.2 Whereas at its March 22, 2018 meeting the Commission approved the State Highway Operation and Protection Program, and included in this program of projects the *Trinidad CAPM Project (EA 01-0F820)*, the parties are entering into this Project Baseline Agreement to document the project cost, schedule, scope and benefits, as detailed on the Project Programming Request Form attached hereto as Exhibit A and the Project Report attached hereto as Exhibit B, as the baseline for project monitoring by the Commission.

3.3 The undersigned Project Applicant certifies that the funding sources cited are committed and expected to be available; the estimated costs represent full project funding; and the scope and description of benefits is the best estimate possible.

4. GENERAL PROVISIONS

The Project Applicant, Implementing Agency, and Caltrans agree to abide by the following provisions:

4.1 To meet the requirements of the Road Repair and Accountability Act of 2017 (Senate Bill [SB] 1, Chapter 5, Statutes of 2017) which provides the first significant, stable, and on-going increase in state transportation funding in more than two decades.

4.2 To adhere, as applicable, to the provisions of the Commission:

- ☐ Resolution *Insert Number* , "Adoption of Program of Projects for the Active Transportation Program", dated
- ☐ Resolution *Insert Number* , "Adoption of Program of Projects for the Local Partnership Program", dated
- ☐ Resolution *Insert Number* , "Adoption of Program of Projects for the Solutions for Congested Corridors Program", dated
- ☒ Resolution G-18-13, "Adoption of Program of Projects for the State Highway Operation and Protection Program", dated March 22, 2018
- ☐ Resolution *Insert Number* , "Adoption of Program of Projects for the Trade Corridor Enhancement Program", dated

4.3 All signatories agree to adhere to the Commission's State Highway Operation and Protection Program, Guidelines. Any conflict between the programs will be resolved at the discretion of the Commission.

4.4 All signatories agree to adhere to the Commission's SB 1 Accountability and Transparency Guidelines and policies, and program and project amendment processes.

4.5 Caltrans agrees to secure funds for any additional costs of the project.

4.6 Caltrans agrees to report on a quarterly basis; after July 2019, reports will be on a semi-annual basis on the progress made toward the implementation of the project, including scope, cost, schedule, outcomes, and anticipated benefits.

4.7 Caltrans agrees to prepare program progress reports on a quarterly basis; after July 2019, reports will be on a semi-annual basis and include information appropriate to assess the current state of the overall program and the current status of each project identified in the program report.

4.8 Caltrans agrees to submit a timely Completion Report and Final Delivery Report as specified in the Commission's SB 1 Accountability and Transparency Guidelines.

4.9 All signatories agree to maintain and make available to the Commission and/or its designated representative, all work related documents, including without limitation engineering, financial and other data, and methodologies and assumptions used in the determination of project benefits during the course of the project, and retain those records for four years from the date of the final closeout of the project. Financial records will be maintained in accordance with Generally Accepted Accounting Principles.

4.10 The Transportation Inspector General of the Independent Office of Audits and Investigations has the right to audit the project records, including technical and financial data, of the Department of Transportation, the Project Applicant, the Implementing Agency, and any consultant or sub-consultants at any time during the course of the project and for four years from the date of the final closeout of the project, therefore all project records shall be maintained and made available at the time of request. Audits will be conducted in accordance with Generally Accepted Government Auditing Standards.

5. SPECIFIC PROVISIONS AND CONDITIONS

5.1 Project Schedule and Cost
See Project Programming Request Form, attached as Exhibit A.

5.2 Project Scope
See Project Report or equivalent, attached as Exhibit B. At a minimum, the attachment shall include the cover page, evidence of approval, executive summary, and a link to or electronic copy of the full document.

5.3 Other Project Specific Provisions and Conditions

Attachments:

Exhibit A: Project Programming Request Form
Exhibit B: Project Report

SIGNATURE PAGE
TO
PROJECT BASELINE AGREEMENT

Trinidad CAPM Project (EA 01-0F820)

Resolution SHOPP-P-1920-02B

FOR Matthew K. Brady — Date 8/28/19

District Director

California Department of Transportation

Bob Franzoia — Date 9/17/2019

Acting Director

California Department of Transportation

Susan Bransen — Date 10/17/19

Executive Director

California Transportation Commission

Baseline agreement information was extracted from Caltrans' project data systems. Project description, funding and performance measures are from CTIPS. Project delivery milestones are from PRSM. All information is current and accurate.

STATE OF CALIFORNIA • DEPARTMENT OF TRANSPORTATION

BASELINE AGREEMENT

Date:	08/19/19 01:58:13 PM

District	EA	Project ID	PPNO	Project Manager
01	0F820	0116000067	2439	BUCK, JENNIFER L

County	Route	Begin Postmile	End Postmile	Implementing Agency	
HUM	101	R 90.1	109.6	PA&ED	Caltrans
				PS&E	Caltrans
				Right of Way	Caltrans
				Construction	Caltrans

Project Nickname

TRINIDAD CAPM

Location/Description

Near Trinidad, from 1.3 miles south of School Road to 0.4 mile north of Big Lagoon Bridge. Pavement rehabilitation.

Legislative Districts

Assembly:	02	Senate:	02	Congressional:	02

PERFORMANCE MEASURES

	Primary Asset	Good	Fair	Poor	New	Total	Units
Existing Condition	Pavement	14.012	62.907			76.919	Lane-miles
Programmed Condition	Pavement	76.919				76.919	Lane-miles

Project Milestone	Actual	Planned
Project Approval and Environmental Document Milestone	07/31/19	
Right of Way Certification Milestone		11/01/20
Ready to List for Advertisement Milestone		11/15/20
Begin Construction Milestone (Approve Contract)		06/01/21

FUNDING (Allocated amounts are shaded)

Component	Fiscal Year	SHOPP					Total
PA&ED	17/18	332					332
PS&E	19/20	561					561
RW Support	19/20	84					84
Const Support	20/21	4,287					4,287
RW Capital	20/21	12					12
Const Capital	20/21	45,355					45,355
Total		50,631					50,631

01 – HUM – 101 – PM R90.1/109.6
0F820 – 0116000067 – 2439
20.XX.201.121
August 2019

Project Report

For Project Approval

On Route 101 in Humboldt County

Between PM R90.1

And PM 109.6

I have reviewed the right-of-way information contained in this report and the right-of-way data sheet attached hereto, and find the data to be complete, current and accurate:

FOR Karen Hawkins, *NORTH REGION RIGHT OF WAY OFFICE MANAGER REDDING/EUREKA*

APPROVAL RECOMMENDED:

Jen Buck, *PROJECT MANAGER*

PROJECT APPROVED:

FOR Matthew K. Brady, *DISTRICT DIRECTOR* 7/31/2019 *DATE*

This Page Intentionally Left Blank

VICINITY MAP

No Scale

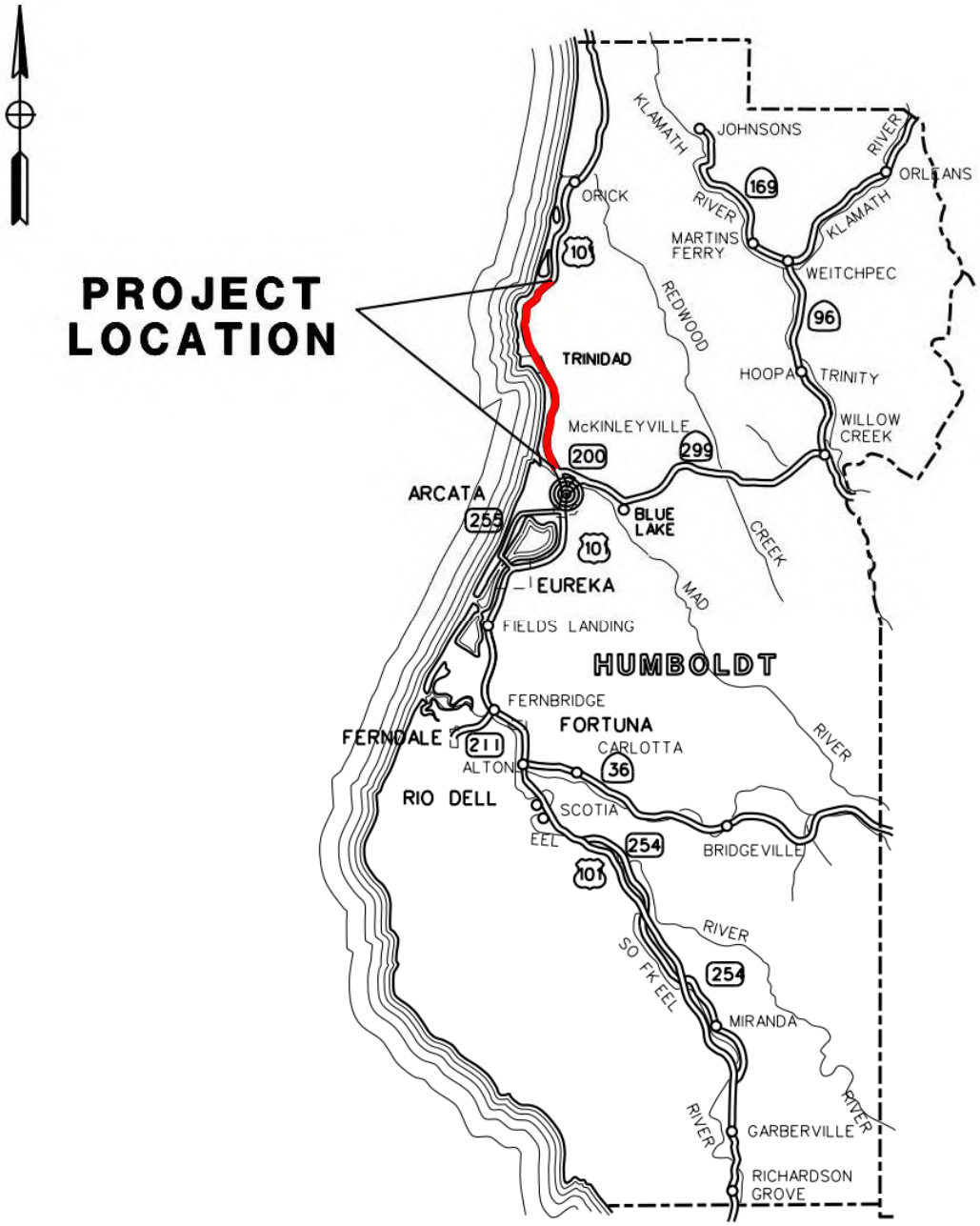

TRINIDAD CAPM
01-HUM-101-PM R90.1/109.6

This Page Intentionally Left Blank

This project report has been prepared under the direction of the following registered civil engineer. The registered civil engineer attests to the technical information contained herein and the engineering data upon which recommendations, conclusions, and decisions are based.

REGISTERED CIVIL ENGINEER *DATE* 7/23/19

REGISTERED PROFESSIONAL ENGINEER
Eduardo G. Simonsen
No. C82608
Exp. 09/30/20
CIVIL
STATE OF CALIFORNIA

This Page Intentionally Left Blank

Table of Contents

This Page Intentionally Left Blank

1. INTRODUCTION

Project Description:

This project proposes to replace failing hot mix asphalt (HMA) (digouts) and apply a 0.15' gap graded rubberized hot mix asphalt (RHMA-G) overlay from edge of pavement (EP) to EP along Route 101, including entrance and exit ramps, Clam Beach Vista Point, and a park-and-ride facility within the project limits. Cold-planing will occur at conforms, under overcrossings (OC) to maintain vertical clearance and will be required at locations where the pavement is sufficiently degraded. Shoulder backing, sign replacement, rumble strip, drainage inlets and overside drain upgrades will be included, as required. Upgrading traffic safety system devices, including guardrail, terminal systems, barrier transitions and crash cushions to the current standard is proposed. Two partially functioning continuous Vehicle Classification Stations (VCS) will be upgraded to fully functional status. Hot Mix Asphalt (HMA) dike will be removed and replaced as required and existing pavement delineation will be replaced. All work will be conducted within Caltrans' Right-of-Way. Refer to Project Location Map (Attachment A), Summary of Existing Conditions (Attachment B), Typical Cross Sections (Attachment C) and Locations of Work (Attachment D) for project information.

Table 1 - Project Information

Project Limits	01-HUM-101-PM R90.1/109.6	
	Current Cost Estimate:	**Escalated Cost Estimate:**
Capital Outlay Support	$4,704K	$5,320K
Capital Outlay Construction	$40,470K	$45,787K
Capital Outlay Right-of-Way	$10K	$11K
Funding Source	20.XX.201.121	
Funding Year	20-21	
Type of Facility	4-lane freeway (PM 90.1 - 106.63) 4-lane expressway (PM 106.63 - 109.494) 2-lane conventional highway (PM 109.494 - 109.6)	
Number of Structures	15	
SHOPP Project Output	76.919 Lane miles	
Environmental Determination or Document	CE (CEQA), CE (NEPA)	
Legal Description	In Humboldt County in and near Trinidad from 1.3 miles south of School Road OC to 0.4 mile north of Big Lagoon Bridge	
Project Development Category	5	

2. RECOMMENDATION

This project report provides approval of the project's proposed improvements and recommends that the project proceed to the design phase.

3. PURPOSE AND NEED

Purpose:
The purpose of this project is to preserve the drivability and serviceability of this section of Route 101.

Need:
This portion of Route 101 contains alligator cracking and surface rutting and is degrading such that Highway Maintenance programs are inadequate to preserve the existing roadway.

4. EXISTING FACILITY, DEFICIENCIES AND TRAFFIC DATA

4A. Roadway Geometric Information

Table 2 - Roadway Geometric Information

Facility Location	Through Traffic Lanes			Paved Shoulder Width		Median Width	Additional Paved Width for Bicycle Lane or Other
(Post Mile Limits)	Number of Lanes	Lane Width (ft)	Type (Flexible, Rigid, or Composite)	Left (ft)	Right (ft)	(ft)	(ft)
R90.10 – R93.87	4	12	Flexible	2	8	22 – 46	--
R93.87 – R93.97	5	12	Flexible	2	8	36	--
R93.97 – R97.02	4	12	Flexible	2	8	36	--
R97.02 – R97.46	4	12	Flexible	1	2	22	--
R97.46 – 98.06	4	12	Flexible	2	4 – 6	4 – 10	--
98.06 – 98.07	4	12	Flexible	0	4	4	--
98.07 – 98.68	4	12	Flexible	0 – 2	4 – 5	4 – 10	--
98.68 – 100.71	4	12	Flexible	0 – 2	4 – 6	8	--
100.71 – R106.20	4	12	Flexible	2 – 5	8	4 – 22	--
R106.20 – 108.22	4	12	Flexible	0	4	4	--
108.22 – 109.17	4	11	Flexible	2	2	4	--
109.17 – 109.26	4	12	Flexible	0	4	4	--
109.26 – 109.60	2	12	Flexible	--	6	--	--

Remarks:
This proposed project will maintain the existing features. No changes are proposed to the existing cross section. Traffic safety devices will be upgraded to current standard, as required. The existing surface consists of various combinations of thicknesses, age, and treatments both with hot mix asphalt and open graded surfacing.

4B. Condition of Existing Facility (Repeat for each homogeneous segment):

1) Traveled Way Data

PMS Category (1-29) N/A Priority Classification (.1-.4) N/A

International Roughness Index (IRI) 103

*Rigid Pavement: No *Flexible Pavement: Yes
* From latest PMS-Pavement Condition Inventory Survey Data.

3rd Stage Cracking % N/A Alligator B Cracking % 8.65

Faulting N/A Patching % N/A

Joint Spalls N/A Rutting 0.15 in

Pumping N/A Bleeding N/A

Corner Breaks % N/A Raveling N/A

Locations(s) of subsurface or ponded surface-water problem:

Ponding or subsurface water problems are not present within the project limits.

Detailed existing pavement information is provided in Attachment G.

2) Pedestrian Facility Data

Table 3 - Pedestrian Facility Data

Facility Type and Location(s)	Meets ADA Standards?	If Facility does not meet ADA Standards, what feature(s) are not ADA compliant?	Status of Each Noncompliant Location
Curb Ramps:	No	Curb Ramps	Correction of this feature will be further evaluated in the design phase
Others:	N/A	N/A	N/A

Remarks:
The project proposes to cold plane to a depth of 0.15' on the on/off ramps in Trinidad at North Westhaven Drive and Main Street to retain curb ramp & roadway elevations. There are three curb ramps at this location that will require further examination in the design phase. Both park and ride facilities along with Clam Beach Vista Point currently include accessible parking stalls and path of travel, the project will comply with ADA standards at these locations. Portions of the existing facility have eight-foot shoulders currently shared with cyclists and pedestrians. The multimodal use of the shoulders will be maintained.

4C. Structures Information

Table 4 - Structures Information

Postmile	Structure		Vertical Clearance Affected (Yes/No)
	Name	Bridge Number	
R90.13	Route 200/101 Separation	04-0172	No
R91.47	School Road OC	04-0168	No
R91.99	Hiller Road OC	04-0173	No
R92.99	Murray Road OC	04-0170	No
R93.85	Airport Road UC	04-0169L	No
R93.85	Airport Road UC	04-0169R	No
R95.62	North Central Avenue UC	04-0095L	No
R95.62	North Central Avenue UC	04-0095R	No
R97.02	Crannell Road OC	04-0073	No
R97.46	Little River Bridge	04-0026	No
98.07	Westhaven Drive UC	04-0056	No
98.36	Sixth Street OC	04-0057	No
100.71	Trinidad Road UC	04-0058	No
R103.38	Seawood Drive UC	04-0209	No
R106.07	Patricks Point UC	04-0210	No
109.17	Big Lagoon Bridge	04-0027	No

Remarks:
The project proposes to cold plane to a depth of 0.15' at the following locations to maintain the existing vertical clearance:

- School Road OC
- Hiller Road OC
- Murray Road OC
- Crannell Road OC
- Sixth Street OC

4D. Traffic Data

Table 5 - Design Designation and Traffic Index (TI)

County Highway Postmile	HUM 101 R90.1/98.0	HUM 101 98.0/109.6
Annual ADT		
Base Year 2017	19,300	9,300
2019	19,800	9,540
2021	20,300	9,780
2031	22,800	11,000
2041	25,300	12,200
Peak Hour		
Base Year 2017	2,300	1,200
2019	2,360	1,230
2021	2,420	1,260
2031	2,710	1,420
2041	3,010	1,570
Directional %	61	61
DH Truck %	4.0	4.0
2019 TI	7.0	6.5
2021 TI	7.0	6.5
10-year TI	9.5	8.5
20-year TI	10.0	9.0

Target construction year is 2021 with an ADT of 20,300 vehicles for postmiles R90.1 – 98.0 and 9,780 for postmiles 98.0 – 109.6. The design hourly volumes for the construction year are 2,420 and 1,260 vehicles respectively with 4% trucks.

A collision analysis was completed on May 24, 2019 which included the most recent collision data (January 1, 2016 through December 31, 2018). This highway segment has an actual Fatal Collision rate of 0.016 (1.45 times the statewide average), F+I rate of 0.15 (0.88 times the statewide average) with a total Actual Accident rate of 0.46 (1.10 times the statewide average).

The primary collision factor was Other Than Driver (34.1%). The primary type of collision was Hit Objects (50%). The primary roadway condition was No Unusual Condition (85%).

Upgrading traffic safety system devices to the current standard will improve the crashworthiness of roadside safety hardware and is expected to reduce the severity of collisions

Safety Review Date: 06/28/19

5. CORRIDOR AND SYSTEM COORDINATION

Within the project limits, Route 101 is classified as a freeway/expressway between PM 90.1 through 109.55 and an expressway/conventional highway from 109.55 to

109.60. Route 101 is a principal arterial serving interregional and interstate traffic, with relatively high traffic volumes and heavy use by both truck and tourist traffic. Route 101 is the economic lifeline of the north coast and is a major goods movement route. It is a principal route to many north coast recreational areas, contributing to the economic well-being by facilitating recreational travel and tourism. Route 101 is of interregional and interstate significance. It is part of the Strategic Highway Network, the National Highway System, and the Interregional Road System. Route 101 is designated as a High Emphasis Focus Route in the State Interregional Transportation Strategic Plan (ITSP). The project segment of Route 101 is part of the STAA and the Pacific Coast Bike Route. The design vehicle is STAA truck. Facility characteristics are summarized in Table 6.

Table 6 - Route 101 Facility Characteristics

Functional Classification	Principal Arterial
Freeway and Expressway System	Yes
Subsystem of Highways for Extra Legal Loads	No
Surface Transportation Assistance Act (STAA) Trucks	Yes
Strategic Highway Network	Yes
National Highway System	Yes
Interregional Road System	Yes
Interregional Transportation Strategic Plan	Yes

Complete Streets

Caltrans' Complete Streets Directive promotes a transportation system that safely accommodates bicyclists, pedestrians and transit users. This project is in a mixed rural and urban area with adjacent land use as compact communities and suburban communities. In the vicinity of the project, Route 101 is a high-volume route serving a variety of traffic including local traffic, commuters, interregional and interstate freight and seasonal tourism. Bicycles are allowed on all State Highways within District 1, including Route 101. The project segment of Route 101 is part of the Pacific Coast Bike Route. Portions of the existing facility have eight-foot shoulders currently shared with bikes and pedestrians. The multimodal use of the shoulders will be maintained.

System Coordination

The following projects are within or near the vicinity of this CAPM project:

- EA 01-0J510 (PM 87.8/90.1) – Overlay in and near Arcata
- EA 01-0G370 (PM 97.0/97.5) – Fence Repair near Westhaven
- EA 01-48040 (PM 98.4/100.7) – Interchange work near Trinidad
- EA 01-0J240 (PM 108.20/109.60) – Microsurfacing
- EA 01-0J250 (PM 100.7/106.07) – Microsurfacing

State Planning
The build alternative is consistent with the 20-Year Facility Concept and Ultimate Facility Concept listed in the Draft Transportation Concept Report for Route 101 in District 1, dated October 2017.

The 20-Year Facility Concept stated for the project location is:

- Maintain the existing Ultimate Facility Concept (i.e. a mixture of 4-lane freeway/expressway and 2-lane conventional highway).

The Ultimate Facility Concept stated is:

- Develop the Route 101 Eureka-Arcata Corridor as a "Climate Resilient Corridor", to address the impacts of sea level rise.

6. ALTERNATIVES

6A. CAPM strategy:

Structures:
Structures, Transition Railing and Concrete Barrier Transitions within the project limits are summarized in the following table:

Table 7 - Structures, Transition Railing and Concrete Barrier Transitions

Bridge No.	Postmile	Bridge Name	Direction of Transition Railing NB/SB Right/Left Approach	Transition Railing Proposed (Yes/No)	Concrete Barrier Transition Proposed (Yes/No)
04-0168	R 91.47	School Rd OC	NB & SB Right Approach	Yes	Yes
04-0173	R 91.99	Hiller Rd OC	NB & SB Right Approach	Yes	Yes
04-0170	R 92.99	Murray Rd OC	NB & SB Right Approach	Yes	Yes
04-0169L	R 93.85	Airport Rd UC	SB Right Approach	Yes	No
04-0169R	R 93.85	Airport Rd UC	NB Right Approach	Yes	Yes
04-0095L	R 95.62	North Central Ave UC	SB Right Approach	Yes	Yes
04-0095R	R 95.62	North Central Ave UC	NB Right Approach	Yes	Yes
04-0073	R 97.02	Crannell Road OC	NB & SB Right Approach	Yes	Yes
04-0026	R 97.46	Little River	NB Right Approach	Yes	Yes
04-0026	R 97.46	Little River	SB Right Approach	Yes	No
04-0056	98.07	Westhaven Drive UC	NB & SB Right Approach	Yes	No
04-0057	98.36	Sixth Street OC	SB Right Approach	Yes	No
04-0058	100.71	Trinidad Rd UC	NB & SB Right Approach	Yes	No
04-0209	R 103.38	Seawood Dr UC	NB & SB Right Approach	Yes	Yes
04-0210	R 106.07	Patricks Point UC	NB & SB Right Approach	Yes	Yes
04-0210	R 106.07	Patricks Point UC	SB Right Departure	Yes	Yes
04-0027	109.17	Big Lagoon Bridge	NB & SB Right Departure	Yes	Yes

Remarks:
The project proposes to upgrade median barrier and median terminals at both under and overcrossing locations due to an anticipated approved median barrier terminal.

Pavement Strategy:
Traveled Way and Shoulders (Route 101)

- Roadway surface that is in reasonable condition to receive overlay does not require removal prior to overlay work
- Cold plane deteriorated AC surface to a depth of 0.10' (0.15' at on/off ramps at Trinidad to comply with ADA standards) prior to overlay work where required
- Grind 0.15' at structure conform locations
- Grind 0.10' at Clam Beach Vista Point and overlay with 0.15' of HMA-A
- Place 0.25' HMA-A over 0.50' CL2 AB at access to Hammond Trail at Clam Beach Vista Point
- Overlay park and ride facilities with 0.15' of HMA-A
- Grind 0.15' at structures to maintain existing vertical clearance as required
- Dig out and repair the localized failure areas to a depth of 0.33 feet (mill & fill with HMA (Type A))
- Seal cracks wider than ¼ inch by the rout and seal method
- Overlay with 0.15' RHMA-G
- Pavement Smoothness specification and incentive are incorporated in the project

Existing Guardrail
MBGR and end treatments will be replaced with MGS as required. All upgraded MGS locations will include colored vegetation control (minor concrete).

Dikes
Existing HMA dike will be removed and replaced as required.

Drainage Inlets and Overside Drains
Existing drainage inlets located outside of the edge of pavement will be kept in place. Drainage inlets located within the dike but outside of the shoulder will be preserved by maintaining the existing flow patterns in the immediate vicinity of the inlet. Drainage inlets located within the overlay area will be adjusted to grade as required or will require pavement conform. The project proposes to replace or repair four overside drains. For drainage details, refer to the Drainage Assessment in Attachment O.

Pavement Delineation
All existing pavement delineation will be replaced.

Park and Ride
Two park and ride facilities, Trinidad East and Trinidad West (Attachment U), are located within the project limits (PM 100.7). Both facilities are located in the City of Trinidad and within Caltrans' Right of Way. The project proposes to overlay and replace existing pavement delineation at both park and ride facilities. Existing accessible parking stalls and path of travel will comply with ADA standards at these locations.

Rest Areas
Two rest area facilities, Route 101 Northbound (PM 105.2) and Southbound (PM 102.9) are located within the project limits. Entrance and exit ramps are included in the proposed overlay (Attachment U).

Life-Cycle Cost Analysis
A Life Cycle Cost Analysis is not required as stated in the preface and chapter 1 of the Life Cycle Cost Analysis Procedures Manual.

Scoping Meeting
A scoping meeting was conducted on February 13, 2018. The scope of this project remains consistent with the scope of work outlined in the Small Capital Value Project Initiation Document approved on June 21, 2016 and Design Information Bulletin 81-01 Capital Preventative Maintenance Guidelines.

Traffic Operation Enhancements
There are two partially functioning continuous Vehicle Classification Stations (VCS) located within the limits of the project (PM 97.5 and 107.67). The project proposes to upgrade the two existing stations to fully functional status. These upgrades include two vehicle detection loops per lane and one piezo detector per lane at each VCS. As proposed the stations will provide count data that will satisfy data collection requirements as well as provide real time data.

Date of Traffic Operational Review: 06/25/19

Nonstandard Design Features

Design Feature #1: Minimum Horizontal Clearances

- It is proposed to perpetuate the existing nonstandard horizontal clearance from ETW to the existing MBGR (proposed MGS upgrade) locations

Table 8 – Horizontal Clearance Guardrail Locations

Bridge Name	Location		Direction	Structure Feature	Existing MBGR Length	Proposed MGS Length	Existing Horizontal Clearance	Proposed Horizontal Clearance	Standard Minimum Horizontal Clearance	Constraint
	Begin Postmile	End Postmile	(Lt/Rt)		LF	LF	Ft	Ft	Ft	
--	R 90.85	R 90.93	Lt	--	400	400	8	8	10	Hinge point
School Rd OC	R 91.46	R 91.47	Rt	NB Right Approach Guardrail	62.5	75	8	8	10	Bridge Rail
School Rd OC	R 91.47	R 91.49	Lt	SB Right Approach Guardrail	62.5	75	8	8	10	Bridge Rail
Hiller Rd OC	R 91.97	R 91.99	Rt	NB Right Approach Guardrail	62.5	62.5	8	8	10	Bridge Rail
Hiller Rd OC	R 91.99	R 92.00	Lt	SB Right Approach Guardrail	134.5	134.5	8	8	10	Bridge Rail
Murry Rd OC	R 92.98	R 92.99	Rt	NB Right Approach Guardrail	62.5	75	8	8	10	Bridge Rail
Murry Rd OC	R 92.99	R 93.00	Lt	SB Right Approach Guardrail	62.5	75	8	8	10	Bridge Rail
--	R 93.16	R 93.46	Rt	--	1562.5	1562.5	8	8	10	Hinge point

Table 8 – Horizontal Clearance Guardrail Locations

Bridge Name	Location		Direction	Structure Feature	Existing MBGR Length	Proposed MGS Length	Existing Horizontal Clearance	Proposed Horizontal Clearance	Standard Minimum Horizontal Clearance	Constraint
	Begin Postmile	End Postmile	(Lt/Rt)		LF	LF	Ft	Ft	Ft	
--	R 93.18	R 93.47	Lt	--	1487.5	1487.5	8	8	10	Hinge point
Airport Rd UC	R 93.82	R 93.85	Lt	SB Right Departure Guardrail	162.5	162.5	8	8	10	Bridge Rail
Airport Rd UC	R 93.84	R 93.85	Rt	NB Right Approach Guardrail	62.5	75	8	8	10	Bridge Rail
Airport Rd UC	R 93.87	R 93.88	Lt	SB Right Approach Guardrail	62.5	75	8	8	10	Bridge Rail
Airport Rd UC	R 93.87	R 93.91	Rt	NB Right Departure Guardrail	168.5	168.5	8	8	10	Bridge Rail
--	R 94.36	R 94.68	Lt	--	1687.5	1687.5	8	8	10	Hinge point
--	R 94.48	R 94.80	Rt	--	1687.5	1687.5	8	8	10	Hinge point
North Central Ave UC	R 95.60	R 95.62	Lt	SB Right Departure Guardrail	87.5	87.5	8	8	10	Bridge Rail
North Central Ave UC	R 95.61	R 95.69	Rt	NB Right Approach Guardrail	62.5	75	8	8	10	Bridge Rail
North Central Ave UC	R 95.64	R 95.66	Lt	SB Right Approach Guardrail	62.5	75	8	8	10	Bridge Rail
North Central Ave UC	R 95.64	R 95.62	Rt	NB Right Departure Guardrail	237.5	237.5	8	8	10	Bridge Rail
Crannell Road OC	R 97.00	R 97.02	Rt	NB Median Guardrail	134.5	134.5	4	4	5	Bridge Rail
Crannell Road OC	R 97.01	R 97.02	Rt	NB Right Approach Guardrail	62.5	75	8	8	10	Bridge Rail
Crannell Road OC	R 97.02	R 97.03	Lt	SB Right Approach Guardrail	62.5	75	8	8	10	Bridge Rail
Crannell Road OC	R 97.02	R 97.04	Lt	SB Median Guardrail	134.5	134.5	4	4	5	Bridge Rail
Little River	R 97.43	R 97.46	Rt	NB Right Approach Guardrail	112.5	112.5	2	2	10	Bridge Rail
Little River	R 97.53	97.80	Lt	SB Right Approach Guardrail	2850	2850	1	1	10	Bridge Rail
Westhaven Drive UC	97.83	98.06	Lt	SB Right Departure Guardrail	1175	1175	4	4	10	Bridge Rail
Westhaven Drive UC	98.03	98.06	Rt	NB Right Approach Guardrail	150	150	4	4	10	Bridge Rail
Westhaven Drive UC	98.09	98.36	Lt	SB Right Approach Guardrail	1350	1350	4	4	10	Bridge Rail
Sixth Street OC	98.36	98.39	Lt	SB Right Approach Guardrail	87.5	87.5	5	5	10	Bridge Rail
Trinidad Rd UC	100.68	100.70	Rt	NB Right Approach Guardrail	81.25	81.25	4	4	10	Bridge Rail
Trinidad Rd UC	100.73	100.81	Lt	SB Right Approach Guardrail	325	325	4	4	10	Bridge Rail
--	R 101.65	R 101.71	Rt	--	300	300	8	8	10	Hinge point
Seawood Dr UC	R 103.36	R 103.38	Rt	NB Right Approach Guardrail	62.5	75	8	8	10	Bridge Rail
Seawood Dr UC	R 103.40	R 103.44	Lt	SB Right Approach Guardrail	187.5	187.5	8	8	10	Bridge Rail
--	R 105.60	R 105.67	Lt	--	412.5	412.5	8	8	10	Hinge point
Patricks Point UC	R 105.99	R 106.07	Lt	SB Right Departure Guardrail	312.5	312.5	8	8	10	Bridge Rail
Patricks Point UC	R 106.05	R 106.07	Rt	NB Right Approach Guardrail	62.5	75	8	8	10	Bridge Rail
Patricks Point UC	R 106.09	R 106.12	Lt	SB Right Approach Guardrail	137.5	137.5	8	8	10	Bridge Rail

Table 8 – Horizontal Clearance Guardrail Locations

Bridge Name	Location		Direction	Structure Feature	Existing MBGR Length	Proposed MGS Length	Existing Horizontal Clearance	Proposed Horizontal Clearance	Standard Minimum Horizontal Clearance	Constraint
	Begin Postmile	End Postmile	(Lt/Rt)		LF	LF	Ft	Ft	Ft	
Big Lagoon	R 109.16	R 109.18	Lt	SB Right Departure Guardrail	62.5	62.5	2	2	8	Bridge Rail
Big Lagoon	R 109.27	R 109.29	Rt	NB Right Departure Guardrail	62.5	75	2	2	8	Bridge Rail

Design Feature #2: Stopping Sight Distance

- The project proposes to perpetuate nonstandard stopping sight distance at several existing MBGR (proposed MGS upgrade) locations. The MGS locations and stopping sight distances are summarized in the following table.

Table 9: Stopping Sight Distances

LOCATION (PM)		DIRECTION	EXISTING MBGR LENGTH	PROPOSED MGS LENGTH	EXISTING STOPPING SIGHT DISTANCE	PROPOSED STOPPING SIGHT DISTANCE	STANDARD MIN. STOPPING SIGHT DISTANCE	SIGHT DISTANCE OBSTRUCTIONS
FROM	TO	Lt / Rt	LF	LF	LF	LF	LF	
R94.48	R94.80	Rt	1687.5	1687.5	482	482	750	Guardrail
R97.53	97.78	Lt	2850	2850	275	275	750	Guardrail
100.68	100.70	Rt	81.5	81.5	515	515	750	Guardrail
R106.05	R106.06	Rt	62.5	75	487	487	750	Guardrail

Table 10 - Design Standards Risk Assessment

Design Standard from Highway Design Manual Tables 82.1A & 82.1B	Probability of Design Exception Approval (None, Low, Medium, High,)	Justification for Probability Rating
HDM 309.1(3)(a): The minimum horizontal clearance to all objects, such as bridge rails and safety-shaped concrete barriers, as well as sand-filled barrels, guardrail, etc., on all freeway and expressway facilities, including auxiliary lanes, ramps, and collector-distributor roads, shall be equal to the standard shoulder width of the highway facility as stated in Table 302.1. A minimum clearance of 4 feet shall be provided where the standard shoulder width is less than 4 feet. Approach rail connections to bridge rail may require special treatment to maintain the standard shoulder width. **HDM 309.1(3)(c): On conventional highways, frontage roads, city streets and county roads within the State right of way (all without curbs), the minimum horizontal clearance shall be the standard shoulder width as listed in Tables 302.1 and 307.2, except that a minimum clearance of 4 feet shall be provided where the standard shoulder width is less than 4 feet.** HDM Index 203.1 **General Controls: Horizontal alignment shall provide at least the minimum stopping sight distance for the chosen design speed at all points on the highway, as given in Table 201.1 and explained in Index 201.3.** (Table 201.1 indicates the minimum stopping sight distance is 750 feet for 70 mph.)	High	Severity of collisions with guardrail is expected to be reduced in lieu of an errant vehicle leaving the roadway, going over the embankment and striking a fixed object or terrain features that are less forgiving than striking the guardrail itself. The Design Standard Decision Document is anticipated to be approved in August 2019.

Refer to Summary of Existing Conditions (Attachment B), Locations of Work (Attachment D), Materials Recommendation (Attachment H) and Performance Report (Attachment T) for additional information.

6B. Hazardous Waste

An Initial Site Assessment (ISA) dated January 28, 2019 found the project has the following hazardous waste issues:

- Aerially Deposited Lead (ADL), which is commonly found in all highway shoulders, may be at a level that requires special handling of excess material. This could include restricted disposal to a commercial hazardous waste facility. It is not anticipated, however, if ADL present at the project site is at a high enough concentration it would be subject to further requirements of the Caltrans/DTSC ADL agreement for handling ADL contaminated soils. Due to the nature of the proposed work, this issue can be addressed with SSP 7-1.02K (6)(j)(iii) EARTH MATERIAL CONTAINING LEAD and a Lead Compliance Plan contract item
- Treated Wood Waste (TWW) will be generated from guard rail removal. This can be addressed with SSP 14-11.14 TREATED WOOD WASTE management in the construction contract and TWW disposal contract item
- An additional SSP will be required for thermoplastic stripe grinding or removal. These issues can be addressed with SSP 36-4 CONTAINING LEAD FROM PAINT AND THERMOPLASTIC and Lead Compliance Plan contract item

The ISA found that the project work site is not on the Hazardous Waste and Substances Site List (Cortese List). Mitigation measures are not anticipated. The ISA is provided in Attachment F.

6C. Material and/or disposal site

A disposal site will not be needed. All digout material will become the property of the contractor unless otherwise stated in the special provisions.

6D. Roadside design and management

Upgrading traffic safety system devices, including guardrail, terminal systems, barrier transitions and crash cushions to the current standard is proposed. This project will maintain the existing geometric features and no changes are proposed to the cross section.

6E. Right-of-way and utility issues

No additional right-of-way will be required. All proposed work of this project will be within the State Highway right-of-way. A minimum lead time of 12 months prior to right-of-way certification. The Right-of-Way Data Sheet is provided in Attachment I.

Utilities

Utility positive location identification at Little River Bridge (04-0026) and Big Lagoon Bridge (04-0027) will be required in the design phase.

6F. Railroad involvement:

There is no railroad involvement on this project.

6G. Recycled materials:

RHMA will be used. Assembly Bill 338 requires the Department of Transportation to meet minimum RHMA usage amounts.

6H. Local and regional input:

There is no local or regional input on this project.

6I. What are the consequences of not doing this entire project?

The roadway surface, within the limits of the proposed project, is beginning to show significant signs of degradation. If the project is not completed a more aggressive pavement rehabilitation strategy will be required, which may include significant digouts and subgrade material repair throughout. The cost of a more aggressive pavement rehabilitation strategy would be significantly more expensive.

7. TRANSPORTATION MANAGEMENT

7A. Transportation Management Plan

A Transportation Management Plan was prepared on February 28, 2019 and is provided in Attachment J. Significant traffic impacts are not anticipated provided the recommendations and requirements are incorporated into the project. In conformance with Deputy Directive-60, District Lane Closure Review Committee approval is not required for projects with anticipated traffic delay less than 30 min. Estimated maximum delay is 5 minutes during reversing control and 10 minutes during ramp detours. Anticipated traffic control includes reversing traffic control on local roads, lane reduction traffic control on Route 101, moving lane closure for striping, shoulder and ramp closures.

7B. Vehicle Detection Systems

A Traffic Census Review was completed on January 31, 2017 and is provided in Attachment K. There are two partially functioning continuous VCS located within the project (PM 97.5 & 107.67). The project proposed to upgrade both VCS to be

fully functional. The fully functional VCS will provide count data, meet data collection requirements and provide real time data.

8. ENVIRONMENTAL COMPLIANCE

The project is Categorically Exempt under Class (1) of the State CEQA guidelines. The project is Categorically Excluded under the National Environmental Policy Act (NEPA). The project expects to receive a Coastal Development Waiver. The Environmental Determination is provided in Attachment L.

Date Approved: 07/08/2019

Access/Staging/Storage areas:
Contractor staging/storage areas must be cleared by a project biologist before construction. All Environmentally Sensitive Areas (Attachment M) are restricted from contractor staging/storage use. Potential staging/storage areas are located along Route 101 on existing pavement and existing gravel areas within Caltrans' right of way in the project limits.

Stormwater:
A Stormwater Data Report will be completed in the design phase. The deferral memo is provided in Attachment N.

Drainage Assessment:
A Drainage Assessment (Attachment O) was completed on April 24, 2019. The project will perpetuate and replace degraded HMA dike, replace five drainage inlet covers and replace or repair overside drains per the Drainage Assessment recommendation with the exception of locations of work that would require a higher level environmental document. The project will perpetuate existing drainage patterns.

Landscape Architecture Assessment Study:
A Landscape Architecture Assessment Study (Attachment P) was completed on May 7, 2019. The project has no foreseen issues with highway aesthetics or community and local involvement.

9. PROJECT ESTIMATE

The current project capital estimate is $40,480K. A detailed cost estimate is provided in Attachment E.

10. FUNDING/PROGRAMMING

Funding
It has been determined that this project is eligible for Federal-aid funding. The project is being funded from the 20.XX.201.121 Pavement Preservation Program in

the 2018 SHOPP.

Programming
This project is currently programmed in the 2018 SHOPP at a cost of $50,631K (2018). This includes $45,355K for Capital Construction cost, $12K for Capital Right of Way costs and $5,264K for support costs.

Estimate
Estimated costs (current dollars) are $40,470K for Construction Capital, $10K for Right of Way Capital and $4,704K for support. Refer to the Programming Sheet (Attachment Q) for the estimate of support resources. The following table shows estimated escalated support cost. Refer to the Programming Sheet (Attachment Q).

Table 11 - Project Support Costs

PROJECT SUPPORT COSTS ($K)

Phase Esc. Rate	PRIOR ACT $	FY 19/20 (4.20%)	FY 20/21 (4.20%)	FY 21/22 (4.20%)	FY 22/23 (4.20%)	FY 23/24 (4.20%)	Future (4.20%)	Total	Sup/Cap%
0	198	134	0	0	0	0	0	332	0.73%
1	0	319	232	0	0	0	0	551	1.20%
2	0	5	11	14	15	16	7	68	0.15%
3	0	0	207	2,716	1,322	115	9	4,369	9.54%
							TOTAL SUPPORT COSTS:	5,320	11.62%

The support cost ratio is 11.62%.

Comparison:
- The escalated construction capital estimate is $432K over the programmed amount of $45,355K.
- The escalated construction capital estimate difference above the programmed amount is within G12 tolerances.
- The escalated right of way capital estimate is $1K under the programmed amount of $12K.

Construction Estimate:
The construction estimate cost reflects refinements in RHMA, guardrail and traffic related quantities and construction unit price adjustments. Drainage improvements were added to the scope and the new pavement smoothness incentive was included after the K phase.

The project will implement the new pavement smoothness incentive directive. The smoothness costs were calculated using the NSSP 39-2.01A(4)(i)(iii) Pavement Smoothness and projected data from the PaveM IRI report for this section of Route 101. See Cost Estimate (Attachment E). The Smoothness Incentive Lump Sum cost for the project is $346,136 which was calculated using $4500 per lane mile which is the recommended cost per lane mile for the overlay thickness of 0.15’.

11. DELIVERY SCHEDULE

Table 12 - Project Milestones

Project Milestones		Milestone Date (Month/Day/Year)
PROGRAM PROJECT	M015	09/16/17
BEGIN ENVIRONMENTAL	M020	11/01/17
RIGHT OF WAY REQTS	M224	07/09/19
PA & ED	M200	08/01/19
PS&E TO DOE	M377	07/01/20
PROJECT PS&E	M380	11/01/20
RIGHT OF WAY CERTIFICATION	M410	11/01/20
READY TO LIST	M460	11/15/20
AWARD	M495	05/01/21
APPROVE CONTRACT	M500	06/01/21
CONTRACT ACCEPTANCE	M600	12/01/22
END PROJECT EXPENDITURES	M800	12/01/24
FINAL PROJECT CLOSEOUT	M900	09/01/26

12. RISKS

A risk register is provided in Attachment R.

Risks:

- Environmental
  - Cultural Resources: As a result of archeological surveys indicating the presence of cultural resources, design changes or additional mitigations may be required.
  - Noise Restrictions: Several sensitive species and critical habitats have been identified within the project limits. Programmatic Agreement with the USFWS will be used as informal consultation. Construction activities will need to be maintained as outlines to avoid delays.
- Construction
  - Paving Prices: The current cost estimate includes paving unit prices based on recent projects. The increase in statewide paving projects may increase the unit price.
  - Smoothness Specification: The new specification for pavement smoothness includes a pay adjustment based on the final smoothness of the pavement surface. The estimate will be reviewed to confirm inclusion of appropriate smoothness pay items and costs.
- Design
  - Drainage Features: Many drainage features are included within the project limits. Unanticipated improvements to drainage systems may increase costs. Construction will coordinate with the contractor, Hydraulics, and Environmental to address additional issues.

13. EXTERNAL AGENCY COORDINATION

This project is considered to be a delegated project in accordance with the most current version of the Stewardship and Oversight Agreement between the Federal Highway Administration (FHWA) and the California Department of Transportation (Caltrans).

The project requires the following coordination:

California Coastal Commission and/or Local Coastal Program
California Public Resources Code Division 20 (California Coastal Act)
Coastal Development Waiver.

Local Agency
A maintenance agreement between the City of Trinidad and Caltrans was executed on November 30, 2009 for the location at Trinidad Road Undercrossing.

14. PROJECT REVIEWS

Scoping team field review Eduardo Simonsen Date 2/13/19
Scoping team field review attendance roster provided in Attachment S.
District Program Advisor Curtis Coburn Date 6/13/19
Headquarters SHOPP Program Advisor Amy Fong Date 6/13/19
District Maintenance Curtis Coburn Date 6/13/19
Headquarters Project Delivery Coordinator Tim Sobleman Date 6/13/19
Project Manager Jennifer Buck Date 6/13/19
District Safety Review Lena Ashley Date 6/13/19
Constructability Review James McGee Date 6/13/19

15. PROJECT PERSONNEL

Name	Title	Phone Number
Eduardo Simonsen	Project Engineer	916-858-0642
Joe Ostdiek	Design Engineer	916-858-0642
Jennifer Buck	Project Manager	707-441-5877
Mark Sobota	District 1 Project Coordination	707-441-5729
David Morgan	District 1 Traffic Safety	707-445-6376
Brandon Larsen	North Region Environmental Office Chief	707-445-6410
Dana York	Senior Environmental Planner	707-445-6416
Jeremiah Joyner	Senior Right of Way Agent	707-445-6424
Tauni Melvin	Senior Utility Coordinator	707-441-5846
Sebastian Cohen	Area Construction Engineer	707-496-4096
Jason Hayes	Field Maintenance Supervisor	707-825-0180
Ed Cramer	Design Oversight Engineer	707-445-6558

16. ATTACHMENTS (NUMBER OF PAGES)

A. Location Map (1)
B. Summary of Existing Conditions (3)
C. Typical Cross Sections (1)
D. Locations of Work (5)
E. Cost Estimate (10)
F. Initial Site Assessment (2)
G. Existing Pavement Data (PaveM) (7)
H. Materials Recommendation (6)
I. Right of Way Data Sheet (6)
J. Transportation Management Plan (10)
K. Traffic Census Review (1)
L. Environmental Determination (2)
M. Environmentally Sensitive Areas (6)
N. Stormwater Data Report Deferral (1)
O. Drainage Assessment (14)
P. Landscape Architecture Assessment Study (9)
Q. Programming Sheet (2)
R. Risk Register (2)
S. Field Visit Roster (1)
T. Performance Report (1)
U. Park and Rides & Rest Areas Overlay Limits (3)

This Page Intentionally Left Blank

Attachment A
LOCATION MAP

This Page Intentionally Left Blank

LOCATION MAP

ATTACHMENT A

No Scale

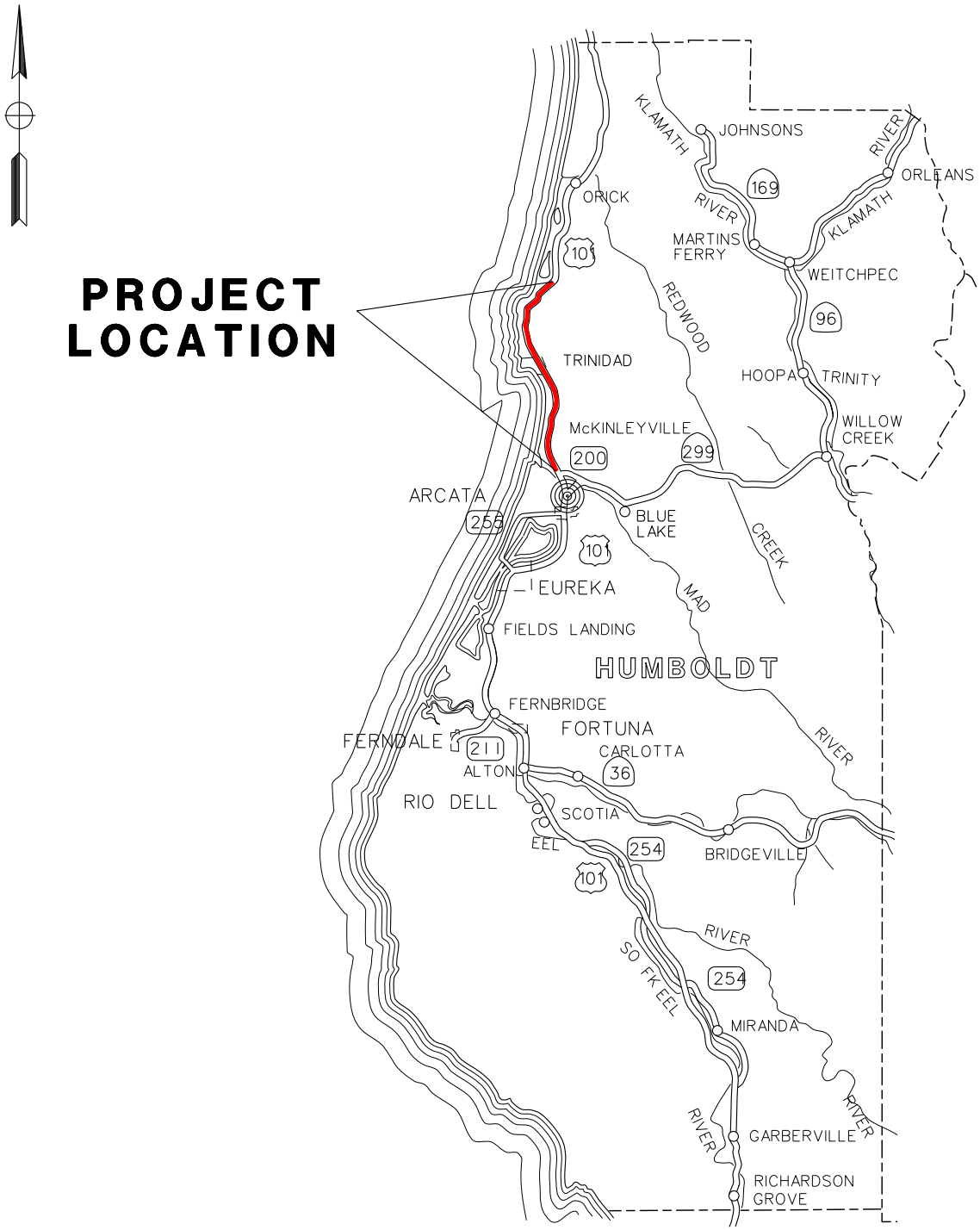

TRINIDAD CAPM

01-HUM-101-PM R90.1/109.6

This Page Intentionally Left Blank

Attachment B
SUMMARY OF EXISTING CONDITIONS

This Page Intentionally Left Blank

*Summary of Existing Route 101 Mainline within Project Limits**

Location & Distance		Left Roadbed						Median			Right Roadbed						Structures**		
Postmile	*Segment Length*	*Lanes*	*Outside Shld (Total)*	*Outside Shld (Treated)*	*Travel Way*	*Inside Shld (Total)*	*Inside Shld (Treated)*	*Type*	*Width*	*Variable Width (Yes/No)*	*Lanes*	*Inside Shld (Total)*	*Inside Shld (Treated)*	*Travel Way*	*Outside Shld (Total)*	*Outside Shld (Treated)*	*Name*	*O/U*	*Exist Vertical Clearance*
R 90.134	0.696	2	8	8	24	5	2	Unpaved (Dirt)	22	No	2	5	2	24	8	8			
R 90.83	0.3	2	8	8	24	5	2	Unpaved (Dirt)	22	Yes	2	5	2	24	8	8			
R 91.13	0.343	2	8	8	24	5	2	Unpaved (Dirt)	46	No	2	5	2	24	8	8			
R 91.473	0.517	2	8	8	24	5	2	Unpaved (Dirt)	46	No	2	5	2	24	8	8	School Rd OC	U	15.2
R 91.99	1.005	2	8	8	24	5	2	Unpaved (Dirt)	46	No	2	5	2	24	8	8	Hiller Rd OC	U	15.4
R 92.995	0.005	2	8	8	24	5	2	Unpaved (Dirt)	46	No	2	5	2	24	8	8	Murray Rd OC	U	15.1
R 93	0.852	2	8	8	24	5	2	Unpaved (Dirt)	46	No	2	5	2	24	8	8			
R 93.852	0.021	2	8	8	24	5	5	Separate Structures	46	No	2	5	5	24	8	8	Airport Rd UC	O	
R 93.873	0.095	3	8	8	36	5	2	Unpaved (Dirt)	36	Yes	2	5	2	24	8	8			
R 93.968	0.511	3	8	8	36	5	2	Unpaved (Dirt)	36	Yes	2	5	2	24	8	8			
R 94.479	0.057	2	8	8	24	5	2	Unpaved (Dirt)	36	Yes	2	5	2	24	8	8			
R 94.536	1.084	2	8	8	24	5	2	Unpaved (Dirt)	46	No	2	5	2	24	8	8			
R 95.62	0.022	2	8	8	24	5	5	Separate Structures	46	No	2	5	5	24	8	8	North Central Ave UC	O	
R 95.642	0.098	2	8	8	24	5	2	Unpaved (Dirt)	46	Yes	2	5	2	24	8	8			
R 95.74	1.03	2	8	8	24	5	2	Unpaved (Dirt)	22	No	2	5	2	24	8	8			
R 96.77	0.25	2	8	8	24	5	2	Unpaved (Dirt)	22	No	2	5	2	24	8	8			
R 97.02	0.437	2	8	8	24	5	2	Unpaved (Dirt)	22	No	2	5	2	24	8	8	Crannell Rd OC	U	15.8
R 97.457	0.074	2	1	1	24	1	1	Separate Structures	22	No	2	2	2	24	2	2	Little River	O	
R 97.479	0.248	2	6	6	24	2	2	Paved	4	Yes	2	0	0	24	4	4			
R 97.531	0.216	2	6	6	24	2	2	Unpaved (Dirt)	4	Yes	2	5	2	24	8	8			
97.727	0.301	2	6	6	24	2	2	Paved	10	No	2	0	0	24	4	4			
98.028	0.039	2	6	6	24	2	2	Paved	4	Yes	2	0	0	24	4	4			
98.067	0.025	2	4	4	24	0	0	Paved	4	No	2	0	0	24	4	4	Westhaven Dr UC	O	
98.092	0.263	2	5	5	24	2	2	Paved	4	No	2	0	0	24	4	4			
98.355	0.042	2	5	5	24	2	2	Paved	4	No	2	0	0	24	4	4	Sixth St OC	U	14.8
98.397	0.284	2	5	5	24	2	2	Paved	10	No	2	0	0	24	4	4			
98.681	1.902	2	5	5	24	2	2	Paved	10	No	2	0	0	24	4	4			
100.583	0.051	2	6	6	24	2	2	Paved	8	No	2	0	0	24	4	4			
100.634	0.071	2	6	6	24	2	2	Paved	8	No	2	0	0	24	4	4			
100.705	0.024	2	4	4	24	2	2	Paved	10	No	2	2	2	24	4	4	Trinidad Rd UC	O	
100.729	0.008	2	8	8	24	5	5	Unpaved (Dirt)	10	No	2	5	5	24	8	8			
R 100.737	0.038	2	8	8	24	5	5	Unpaved (Dirt)	10	Yes	2	5	5	24	8	8			
R 100.775	0.275	2	8	8	24	5	5	Unpaved (Dirt)	10	Yes	2	5	5	24	8	8			
R 101.05	0.187	2	8	8	24	5	5	Unpaved (Dirt)	22	No	2	5	5	24	8	8			
R 101.237	1.663	2	8	8	24	5	5	Unpaved (Dirt)	22	No	2	5	5	24	8	8			
R 102.9	0.478	2	8	8	24	5	5	Unpaved (Dirt)	22	No	2	5	5	24	8	8			
R 103.378	0.019	2	8	8	24	5	5	Unpaved (Dirt)	22	No	2	5	5	24	8	8	Seawood Dr UC	O	
R 103.397	1.743	2	8	8	24	5	5	Unpaved (Dirt)	22	No	2	5	5	24	8	8			
R 105.14	0.929	2	8	8	24	5	5	Unpaved (Dirt)	22	No	2	5	5	24	8	8			
R 106.069	0.017	2	8	8	24	5	5	Paved	22	No	2	5	5	24	8	8	Patricks Pt UC	O	
R 106.086	0.114	2	8	8	24	5	5	Unpaved (Dirt)	8	Yes	2	5	5	24	8	8			
R 106.2	0.085	2	8	8	24	4	4	Unpaved (Dirt)	4	Yes	2	4	4	24	6	6			
106.63	1.59	2	4	4	24	0	0	Paved	4	No	2	0	0	24	4	4			
108.22	0.953	2	4	4	24	0	0	Paved	4	No	2	0	0	24	4	4			
109.173	0.084	2	2	2	22	2	2	Paved	4	No	2	2	2	22	2	2	Big Lagoon	O	
109.257	0.237	2	4	4	24	0	0	Paved	4	No	2	0	0	24	4	4			
109.494	0.056	1	6	6	12	0	0	Traffic Stripe	0	No	1	0	0	12	6	6			

*2013 State Highway Log for District 1, pages 60-62

**2018 Log of Bridges for State Highways in District 1, pages 10-11.

Summary of Existing Route 101 Mainline within Project Limits*

Location & Distance		Left Roadbed						Median			Right Roadbed						Structures**		
Postmile	*Segment Length*	*Lanes*	*Outside Shld (Total)*	*Outside Shld (Treated)*	*Travel Way*	*Inside Shld (Total)*	*Inside Shld (Treated)*	*Type*	*Width*	*Variable Width (Yes/No)*	*Lanes*	*Inside Shld (Total)*	*Inside Shld (Treated)*	*Travel Way*	*Outside Shld (Total)*	*Outside Shld (Treated)*	*Name*	*O/U*	*Exist Vertical Clearance*
109.55	0.139	1	6	6	12	0	0	Traffic Stripe	0	No	1	0	0	12	6	6			
109.689	0.019	1	6	6	12	0	0	Traffic Stripe	0	No	1	0	0	12	6	6			

*2013 State Highway Log for District 1, pages 60-62
**2018 Log of Bridges for State Highways in District 1, pages 10-11.

Summary of Existing Ramps within Project Limits*

Location	**Structure**		**NB Entrance Ramp**				**NB Exit Ramp**				**SB Entrance Ramp**				**SB Exit Ramp**			
Postmile	Name	O/U	*Ramp Length (Sta)*	*Lt Shld (ft)*	*Travel Way (ft)*	*Rt Shld (ft)*	*Ramp Length (Sta)*	*Lt Shld (ft)*	*Travel Way (ft)*	*Rt Shld (ft)*	*Ramp Length (Sta)*	*Lt Shld (ft)*	*Travel Way (ft)*	*Rt Shld (ft)*	*Ramp Length (Sta)*	*Lt Shld (ft)*	*Travel Way (ft)*	*Rt Shld (ft)*
R 91.473	School Rd OC	U	6+00	3	12	7	6+00	3	12	7	7+00	5	12	7	6+50	5	12	7
R 92.995	Murray Rd OC	U	7+00	3	12	7	6+50	3	12	7	6+00	5	12	8	6+50	5	12	8
R 93.852	Airport Rd UC	O	7+00	3	12	7	6+00	3	12	7	5+50	5	12	8	7+50	5	12	8
R 95.62	North Central Ave UC	O	6+20	3	12	7	6+00	3	12	7	6+30	5	12	8	6+00	5	12	8
R 97.02	Crannell Rd OC	U	6+50	3	12	7	7+00	3	12	7	8+00	3	12	7	18+00	3	12	7
98.067	Westhaven Dr UC	O					7+00	3	12	8	6+00	3	12	8				
98.355	Sixth St OC	U	7+50	3	12	8	7+00	3	14	8	7+00	3	15	8	10+00	3	12	8
100.71	Trinidad Rd UC	O	8+00	3	12	8	6+20	3	12	8	7+00	3	12	8	8+00	3	12	8
R 103.38	Seawood Dr UC	O	8+00	3	12	8	6+50	3	12	8	8+00	3	12	8	8+00	3	12	8
R 106.07	Patricks Pt UC	O	9+00	3	12	8	8+00	3	12	8	9+00	3	12	8	9+00	3	12	8

*Shown on as-built plans in Document Retrieval System.

This Page Intentionally Left Blank

Attachment C
TYPICAL CROSS SECTIONS

This Page Intentionally Left Blank

Dist	COUNTY	ROUTE	POST MILES TOTAL PROJECT	SHEET No.	TOTAL SHEETS
01	HUM	101	R90.1/109.6		

FOR DESIGN STUDY ONLY

REGISTERED CIVIL ENGINEER DATE

PLANS APPROVAL DATE

REGISTERED PROFESSIONAL ENGINEER No. Exp. CIVIL STATE OF CALIFORNIA

THE STATE OF CALIFORNIA OR ITS OFFICERS OR AGENTS SHALL NOT BE RESPONSIBLE FOR THE ACCURACY OR COMPLETENESS OF SCANNED COPIES OF THIS PLAN SHEET.

Dokken Engineering
110 Blue Ravine Road
Suite 200
Folsom, CA 95630

NOTE:

1. SEE WORK LOCATION MATRIX FOR MGS LIMITS.

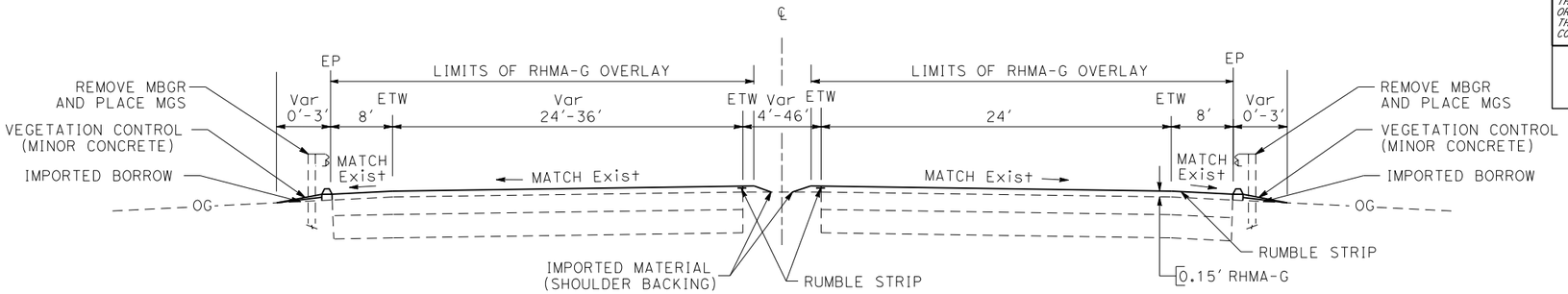

PM R90.1 TO PM 97.46
PM 100.71 TO PM R106.20

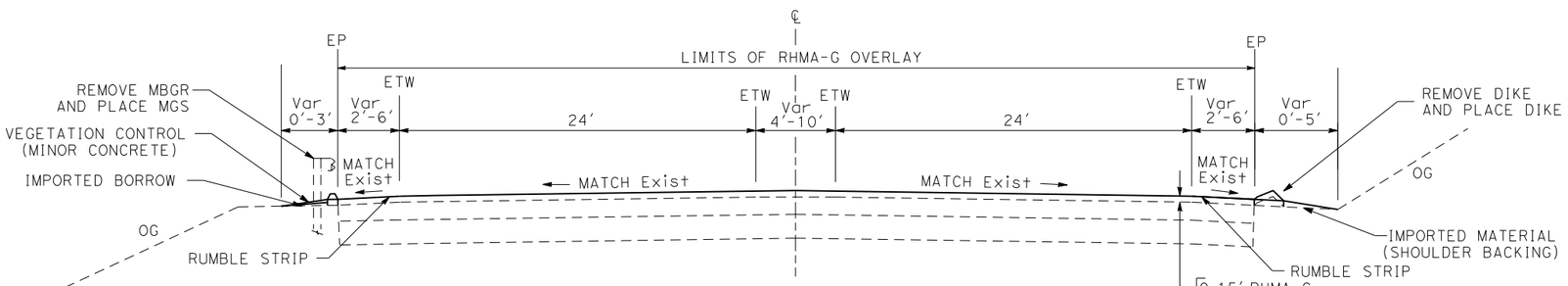

PM R97.46 TO PM 100.71
PM 106.20 TO PM 109.49

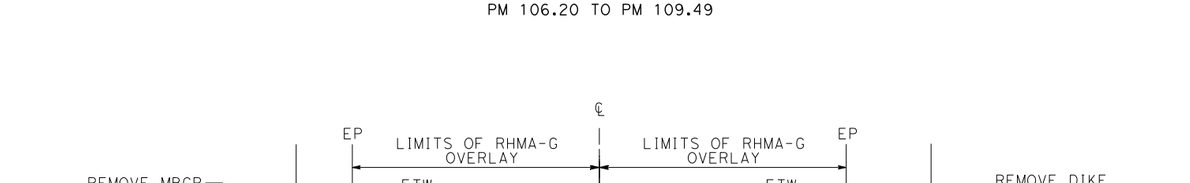

PM 109.49 TO PM 109.60

ROUTE 101

TYPICAL CROSS SECTIONS X-1

NO SCALE

STATE OF CALIFORNIA - DEPARTMENT OF TRANSPORTATION
Caltrans
CONSULTANT FUNCTIONAL SUPERVISOR
CALCULATED-DESIGNED BY
CHECKED BY
REVISED BY
DATE REVISED

LAST REVISION 00-00-00
DATE PLOTTED => 7/23/2019
TIME PLOTTED => 5:28:38 PM

This Page Intentionally Left Blank

Attachment D
LOCATIONS OF WORK

This Page Intentionally Left Blank

NORTHBOUND GUARDRAIL WORK LOCATIONS

0F820 Trinidad CAPM

AFFILIATED STRUCTURE	PM		EXISTING LENGTH (LF)	PROPOSED LENGTH (LF)	ITEM TYPE	DESCRIPTION
School Rd OC Right Approach	R 91.47	R 91.48	62.5	75	MGS & Concrete barrier transition	Construct a concrete barrier transition. Replace MBGR with MGS, WB-31 transition and alternative in-line, install vegetation control (minor concrete).
Schools Rd OC Left Median Approach	R 91.46	R 91.5	124.5	124.5	MGS (Median)	Replace Median MBGR with MGS fixed objects between separate roadbeds (two-way traffic), Alternate Median Terminal and SFT, install vegetation control (minor concrete).
Hiller Rd OC Right Approach	R 91.98	R 91.99	62.5	62.5	MGS & Concrete barrier transition	Construct a concrete barrier transition. Replace MBGR with MGS, WB-31 transition and buried end treatment, install vegetation control (minor concrete).
Hiller Rd OC Left Median Approach	R 91.97	R 92.0	134.5	134.5	MGS (Median)	Replace Median MBGR with MGS fixed objects between separate roadbeds (two-way traffic), Alternate Median Terminal and SFT, install vegetation control (minor concrete).
Murray Rd OC Right Approach	R 92.98	R 92.99	62.5	75	MGS & Concrete barrier transition	Construct a concrete barrier transition. Replace MBGR with MGS, WB-31 transition and alternative in-line, install vegetation control (minor concrete).
Murray Rd OC Left Median Approach	R 92.97	R 93.0	134.5	134.5	MGS (Median)	Replace Median MBGR with MGS fixed objects between separate roadbeds (two-way traffic), Alternate Median Terminal and SFT, install vegetation control (minor concrete).
	R 93.16	R 93.46	1562.5	1562.5	MGS	Replace MBGR with MGS and alternative in-line and SFT. Install vegetation control (minor concrete).
Airport Rd UC Right Approach	R 93.84	R 93.85	62.5	75	MGS & Concrete barrier transition	Construct a concrete barrier transition. Replace MBGR with MGS, WB-31 transition and alternative in-line, install vegetation control (minor concrete).
Airport Rd UC Left Median Approach	R 93.82	R 93.85	160	160	MGS (Median)	Replace Median MBGR with MGS Typical layout for structure appraoch, WB-31 and Alternate Median Terminal, install vegetation control (minor concrete).
Airport Rd UC Right Departure	R 93.87	R 93.91	168.75	168.75	MGS	Replace MBGR with MGS (Layout 12DD) and SFT, install vegetation control (minor concrete).
	R 94.48	R 94.80	1687.5	1687.5	MGS	Replace MBGR with MGS, buried end (1) and SFT (1), install vegetation control (minor concrete).
North Central Ave UC Right Approach	R 95.61	R 95.62	62.5	75	MGS & Concrete barrier transition	Construct a concrete barrier transition. Replace MBGR with MGS, WB-31 transition and alternative in-line, install vegetation control (minor concrete).
North Central Ave UC Left Median Approach	R 95.587	R 95.617	150	150	MGS (Median)	Replace Median MBGR with MGS Typical layout for structure appraoch, WB-31 and Alternate Median Terminal, install vegetation control (minor concrete).
North Central UC Right Departure	R 95.64	R 95.69	237.5	237.5	MGS	Replace MBGR with MGS (Layout 12DD) and SFT, install vegetation control (minor concrete).
Crannel Rd OC Right Approach	R 97.01	R 97.02	62.5	75	MGS & Concrete barrier transition	Construct a concrete barrier transition. Replace MBGR with MGS, WB-31 transition and alternative in-line, install vegetation control (minor concrete).
Crannel Rd OC Left Median Approach	R 97.01	R 97.04	134.5	134.5	MGS (Median)	Replace Median MBGR with MGS fixed objects between separate roadbeds (two-way traffic), Alternate Median Terminal and SFT, install vegetation control (minor concrete).
Little River Bridge Right Approach	R 97.43	R 97.45	112.5	112.5	MGS & Concrete barrier transition	Construct a concrete barrier transition. Replace MBGR with MGS, WB-31 transition and alternative in-line, install vegetation control (minor concrete).

NORTHBOUND GUARDRAIL WORK LOCATIONS

0F820 Trinidad CAPM

AFFILIATED STRUCTURE	PM		EXISTING LENGTH (LF)	PROPOSED LENGTH (LF)	ITEM TYPE	DESCRIPTION
Little River Bridge Median Approach	R 97.48	R 97.48	20	20	Crash Cushion	Upgrade existing crash cushion to MASH standards.
Westhaven Dr UC Right Approach	98.03	98.06	150	150	MGS	Replace MBGR with MGS, WB-31 transition and alternative in-line, perpetuate existing vegetation control (minor concrete).
Trinidad Rd UC Right Approach	100.69	100.70	81.25	81.25	MGS	Replace MBGR with MGS, WB-31 transition and alternative in-line, install vegetation control (minor concrete).
	R 101.654	R 101.711	300	300	MGS	Replace MBGR with MGS, alternative in-line and SFT, install vegetation control (minor concrete).
Seawood Dr UC Right Approach	R 103.362	R 103.374	62.5	75	MGS & Concrete barrier transition	Construct a concrete barrier transition. Replace MBGR with MGS, WB-31 transition and alternative in-line, install vegetation control (minor concrete).
Patricks Point UC Right Approach	R 106.049	R 106.063	62.5	75	MGS & Concrete barrier transition	Construct a concrete barrier transition. Replace MBGR with MGS, WB-31 transition and alternative in-line, install vegetation control (minor concrete).
Big Lagoon Bridge Right Approach	109.16	109.18	62.5	75	Crash Cushion	Upgrade existing crash cushion to MASH standards.
Big Lagoon Departure	109.28	109.29	62.5	75	MGS & Concrete barrier transition	Construct a concrete barrier transition. Replace MBGR with MGS, WB-31 transition and alternative in-line, install vegetation control (minor concrete).

SOUTHBOUND GUARDRAIL WORK LOCATIONS

0F820 Trinidad CAMP

AFFILIATED STRUCTURE	PM		EXISTING LENGTH (LF)	PROPOSED LENGTH (LF)	ITEM TYPE	DESCRIPTION
	R 90.85	R 90.93	400.0	400.0	MGS	Replace MBGR with MGS, alternative in-line and SFT. Perpetuate vegetation control (minor concrete)
Schools Rd OC Left Median Approach	R 91.46	R 91.5	124.5	124.5	MGS (Median)	Replace Median MBGR with MGS fixed objects between separate roadbeds (two-way traffic), Alternate Median Terminal and SFT, install vegetation control (minor concrete).
School Rd OC Right Approach	R 91.48	R 91.49	62.5	75.0	MGS & Concrete barrier transition	Construct a concrete barrier transition. Replace MBGR with MGS, WB-31 and alternative in-line, install vegetation control (minor concrete).
Hiller Rd OC Left Median Approach	R 91.97	R 92.0	134.5	134.5	MGS (Median)	Replace Median MBGR with MGS fixed objects between separate roadbeds (two-way traffic), Alternate Median Terminal and SFT, install vegetation control (minor concrete).
Hiller Rd OC Right Approach	R 91.99	R 92.0	62.5	75.0	MGS & Concrete barrier transition	Construct a concrete barrier transition. Replace MBGR with MGS, WB-31 transition and buried end treatment, install vegetation control (minor concrete).
Murray Rd OC Left Median Approach	R 92.97	R 93.0	134.5	134.5	MGS (Median)	Replace Median MBGR with MGS fixed objects between separate roadbeds (two-way traffic), Alternate Median Terminal and SFT, install vegetation control (minor concrete).
Murray Rd OC Right Approach	R 92.99	R 93.01	62.5	75.0	MGS & Concrete barrier transition	Construct a concrete barrier transition. Replace MBGR with MGS, WB-31 transition and buried end treatment, install vegetation control (minor concrete).
	R 93.18	R 93.47	1487.5	1487.5	MGS	Replace MBGR with MGS, alternative in-line and SFT. Vegetation control (minor concrete) existing, perpetuate.
Airport Rd UC Right Departure	R 93.82	R 93.85	162.5	162.5	MGS	Replace MBGR with MGS (Layout 12DD) and SFT, install vegetation control (minor concrete).
Airport Rd UC Right Approach	R93.87	R 93.89	62.5	75.0	MGS & Concrete barrier transition	Construct a concrete barrier transition. Replace MBGR with MGS, WB-31 and alternative in-line, install vegetation control (minor concrete).
Airport Rd UC Left Median Approach	R 93.87	R 93.9	160.0	160.0	MGS (Median)	Replace Median MBGR with MGS Typical layout for structure appraoch, WB-31 and Alternate Median Terminal, install vegetation control (minor concrete).
	R 94.36	R 94.68	1687.5	1687.5	MGS	Replace MBGR with MGS, alternative in-line and SFT, install vegetation control (minor concrete).
North Central UC Right Departure	R 95.60	R 95.62	87.5	87.5	MGS	Replace MBGR with MGS (Layout 12DD) and SFT, install vegetation control (minor concrete).
North Central Ave UC Left Median Approach	R 95.64	R 95.67	153.0	153.0	MGS (Median)	Replace Median MBGR with MGS Typical layout for structure appraoch, WB-31 and Alternate Median Terminal, install vegetation control (minor concrete).
North Central Ave UC Right Approach	R 95.64	R 95.66	62.5	75.0	MGS & Concrete barrier transition	Construct a concrete barrier transition. Replace MBGR with MGS, WB-31 transition and alternative in-line, install vegetation control (minor concrete).
Crannel Rd OC Left Median Approach	R 97.01	R 97.04	134.5	134.5	MGS (Median)	Replace Median MBGR with MGS fixed objects between separate roadbeds (two-way traffic), Alternate Median Terminal and SFT, install vegetation control (minor concrete).
Crannel Rd OC Right Approach	R 97.02	R 97.03	62.5	75.0	MGS & Concrete barrier transition	Construct a concrete barrier transition. Replace MBGR with MGS, WB-31 transition and alternative in-line, install vegetation control (minor concrete).

SOUTHBOUND GUARDRAIL WORK LOCATIONS

0F820 Trinidad CAMP

AFFILIATED STRUCTURE	PM		EXISTING LENGTH (LF)	PROPOSED LENGTH (LF)	ITEM TYPE	DESCRIPTION
Little River Bridge Right Approach	R 97.53	97.78	2850.0	2850.0	MGS	Replace MBGR with MGS, WB-31 transition and buried end treatment, install vegetation control (minor concrete).
Little River Bridge Median Approach	R 97.53	R 97.53	20.0	20.0	Crash Cushion	Update crash cushion to MASH standards.
Westhaven Dr UC Right Departure	97.83	98.06	1175.0	1175.0	MGS	Replace MBGR with MGS (Layout 12DD) and SFT, install vegetation control (minor concrete).
Westhaven Dr UC Right Approach to Sixth Street OC	98.09	98.354	1350.0	1350.0	MGS	Replace MBGR with MGS, WB-31 transition (1), install vegetation control (minor concrete).
Sixth Street OC Right Approach	98.37	98.39	87.5	87.5	MGS	Replace MBGR with MGS, WB-31 transition and buried end treatment, install vegetation control (minor concrete).
Trinidad Rd UC Right Approach	100.74	100.81	325.0	325.0	MGS	Replace MBGR with MGS, WB-31 transition and alternative in-line, install vegetation control (minor concrete).
Seawood Dr UC Right Approach	R 103.40	R 103.44	187.5	187.5	MGS & Concrete barrier transition	Construct a concrete barrier transition. Replace MBGR with MGS, WB-31 transition and alternative in-line, install vegetation control (minor concrete).
	R 105.60	R 105.67	412.5	412.5	MGS	Replace MBGR with MGS, buried end treatment and SFT, install vegetation control (minor concrete).
Patricks Point UC Right Departure	R 105.99	R 106.06	312.5	312.5	MGS & Concrete barrier transition	Reconstruct a concrete barrier transition. Replace MBGR with MGS (Layout 12DD) and SFT, install vegetation control (minor concrete).
Patricks Point UC Right Approach	R 106.09	R 106.12	137.5	137.5	MGS & Concrete barrier transition	Construct a concrete barrier transition. Replace MBGR with MGS, WB-31 transition and alternative in-line, install vegetation control (minor concrete).
Big Lagoon Bridge Right Departure	109.16	109.18	62.5	62.5	MGS & Concrete barrier transition	Construct a concrete barrier transition. Replace MBGR with MGS, WB-31 transition and alternative in-line, install vegetation control (minor concrete).
Big Lagoon Bridge Right Approach	109.28	109.29	62.5	75.0	Crash Cushion	Update crash cushion to MASH standards.

NORTHBOUND CONCRETE BARRIER TRANSITION WORK LOCATIONS

0F820 Trinidad CAPM

AFFILIATED STRUCTURE	STRUCTURE NUMBER	PM
School Rd OC Right Approach	04-0168	R 91.48
Hiller Rd OC Right Approach	04-0173	R 91.99
Murray Rd OC Right Approach	04-0170	R 92.99
Airport Rd UC Right Approach	04-0169R	R 93.85
North Central Ave UC Right Approach	04-0095R	R 95.62
Crannel Rd Right Approach	04-0073	R 97.02
Little River Right Approach	04-0026	R 97.45
Seawood Dr UC Right Approach	04-0209	R 103.374
Patricks Point UC Right Approach	04-0210	R 106.063
Big Lagoon Bridge Right Departure	04-0027	109.28

SOUTHBOUND CONCRETE BARRIER TRANSITION WORK LOCATIONS

0F820 Trinidad CAPM

AFFILIATED STRUCTURE	STRUCTURE NUMBER	PM
School Rd OC Right Approach	04-0168	R 91.48
Hiller Rd OC Right Approach	04-0173	R 91.99
Murray Rd OC Right Approach	04-0170	R 92.99
North Central Ave UC Right Approach	04-0095L	R 95.64
Crannel Rd OC Right Approach	04-0073	R 97.02
Seawood Dr UC Right Approach	04-0209	R 103.40
Patricks Point UC Right Departure	04-0210	R 106.06
Patricks Point UC Right Approach	04-0210	R 106.09
Big Lagoon Bridge Right Departure	04-0027	109.18

This Page Intentionally Left Blank

Attachment E
COST ESTIMATE

This Page Intentionally Left Blank

Comments Due

7/3/19

PROJECT REPORT COST ESTIMATE

EA: 01-0F8200 PID: 116000067

EA: 01-0F8200

PID: 116000067

District-County-Route: 01-Hum-101

PM: R90.10/109.60

Type of Estimate : Project Report

Program Code : SHOPP

Project Limits : IN HUMBOLDT COUNTY IN AND NEAR TRINIDAD FROM 1.3 MILES SOUTH OF SCHOOL ROAD OC TO 0.4 MILE NORTH OF BIG LAGOON BRIDGE

Project Description: CAPM

Scope : Pavement Preservation

Alternative : Build

SUMMARY OF PROJECT COST ESTIMATE

		Current Year Cost
TOTAL ROADWAY COST	$	40,255,600
TOTAL STRUCTURES COST	$	213,750
SUBTOTAL CONSTRUCTION COST	$	40,469,350
TOTAL RIGHT OF WAY COST	$	10,000
TOTAL CAPITAL OUTLAY COSTS	**$**	**40,480,000**
PA/ED SUPPORT	$	-
PS&E SUPPORT	$	-
RIGHT OF WAY SUPPORT	$	-
CONSTRUCTION SUPPORT	$	-
TOTAL SUPPORT COST	**$**	**-**
TOTAL PROJECT COST	**$**	**40,500,000**

Reviewed By:
TJ Smith
7/3/19

Programmed Amount

	Month	/	Year
Date of Estimate (Month/Year)	June	/	2019
Estimated Construction Start (Month/Year)	June	/	2021
Number of Working Days =			220
Estimated Mid-Point of Construction (Month/Year)	December	/	2021
Estimated Construction End (Month/Year)	May	/	2022
Number of Plant Establishment Days =			0

Estimated Project Schedule

PID Approval	6/27/2017
PA/ED Approval	8/1/2019
PS&E	7/1/2020
RTL	11/15/2020
Begin Construction	6/1/2021

Reviewed by Office Engineer / Cost Estimate Certifier

Office Engineer / Cost Estimate Certifier — Date: 7/3/19 — Phone: 530-741-7152

Approved by Project Manager

Project Manager — Date: 7/3/19 — Phone: 707-441-2097

for Jen Buck

I. ROADWAY ITEMS SUMMARY

	Section		Cost
1	Earthwork	$	638,500
2	Pavement Structural Section	$	18,725,300
3	Drainage	$	156,500
4	Specialty Items	$	1,953,800
5	Environmental	$	339,100
6	Traffic Items	$	2,649,500
7	Detours	$	-
8	Minor Items	$	1,223,200
9	Roadway Mobilization	$	2,568,600
10	Supplemental Work	$	2,820,500
11	State Furnished	$	1,341,500
12	Time-Related Overhead	$	2,588,300
13	Roadway Contingency	$	5,250,800
	TOTAL ROADWAY ITEMS	**$**	**40,255,600**

Estimate Prepared By : Jennifer Langford, Designer — Date: 6/28/19 — Phone: 916-858-0642

Estimate Reviewed By : Eduardo Simonsen, PE, Design Engineer — Date: 6/28/19 — Phone: 916-858-0642

By signing this estimate you are attesting that you have discussed your project with all functional units and have incorporated all their comments or have discussed with them why they will not be incorporated.

EA: 01-0F8200 PID: 116000067

SECTION 1: EARTHWORK

Item code		Unit	Quantity		Unit Price ($)			Cost
190101	Roadway Excavation	CY		x		=	$	-
152320	Lead Compliance Plan	LS	1	x	5,000.00	=	$	5,000
190185	Shoulder Backing	TON	6,796	x	80.00	=	$	543,680
194001	Ditch Excavation	CY		x		=	$	-
198010	Imported Borrow	CY	544	x	165.00	=	$	89,760
192037	Structure Excavation (Retaining Wall)	CY		x		=	$	-
193013	Structure Backfill (Retaining Wall)	CY		x		=	$	-
193031	Pervious Backfill Material (Retaining Wall)	CY		x		=	$	-
16010X	Clearing & Grubbing	LS/ACRE		x		=	$	-
170101	Develop Water Supply	LS		x		=	$	-
19801X	Imported Borrow	CY/TON		x		=	$	-
210130	Duff	ACRE		x		=	$	-
XXXXXX	Some Item	Unit		x		=	$	-

TOTAL EARTHWORK SECTION ITEMS $ 638,500

SECTION 2: PAVEMENT STRUCTURAL SECTION

Item code		Unit	Quantity		Unit Price ($)			Cost
401050	Jointed Plain Concrete Pavement	CY		x		=	$	-
400050	Continuously Reinforced Concrete Pavement	CY		x		=	$	-
404092	Seal Pavement Joint	LF		x		=	$	-
404093	Seal Isolation Joint	LF		x		=	$	-
413117	Seal Concrete Pavement Joint (Silicone)	LF		x		=	$	-
413118	Seal Pavement Joint (Asphalt Rubber)	LF		x		=	$	-
280010	Rapid Strength Concrete Base	CY		x		=	$	-
410095	Dowel Bar (Drill and Bond)	EA		x		=	$	-
390130	Prepaving Inertial Profiler	LS		x		=	$	-
390131	Prepaving Grinding Day	EA		x		=	$	-
390132	Hot Mix Asphalt (Type A)	TON	5,564	x	200.00	=	$	1,112,800
390137	Rubberized Hot Mix Asphalt (Gap Graded)	TON	93,800	x	150.00	=	$	14,070,000
39300X	Geosynthetic Pavement Interlayer (Type X)	SQYD		x		=	$	-
26020X	Class 2 Aggregate Base	TON/CY		x		=	$	-
290201	Asphalt Treated Permeable Base	CY		x		=	$	-
250401	Class 4 Aggregate Subbase	CY		x		=	$	-
374002	Asphaltic Emulsion (Fog Seal Coat)	TON		x		=	$	-
370120	Asphalt-Rubber Binder	TON		x		=	$	-
397005	Tack Coat	TON	417	x	720.00	=	$	300,240
377501	Slurry Seal	TON		x		=	$	-
3750XX	Screenings (Type XX)	TON		x		=	$	-
374207	Crack Treatment	LNMI	50	x	7,500.00	=	$	375,000
374492	Asphaltic Emulsion (Polymer Modified)	TON		x		=	$	-
370001	Sand Cover (Seal)	TON		x		=	$	-
731530	Minor Concrete (Textured Paving)	CY		x		=	$	-
731502	Minor Concrete (Miscellaneous Construction)	CY		x		=	$	-
390021A	Full Width Segment Correction	EA	24	x	6,500.00	=	$	156,000
394073	Place Hot Mix Asphalt Dike (Type A)	LF	32,739	x	1.50	=	$	49,109
394074	Place Hot Mix Asphalt Dike (Type C)	LF	506	x	2.00	=	$	1,012
394076	Place Hot Mix Asphalt Dike (Type E)	LF	25,040	x	3.00	=	$	75,120
394077	Place Hot Mix Asphalt Dike (Type F)	LF	2,014	x	2.00	=	$	4,028
398100	Remove Asphalt Concrete Dike	LF	60,299	x	2.00	=	$	120,598
420201	Grind Existing Concrete Pavement	SQYD		x		=	$	-
150860	Remove Base and Surfacing	CY		x		=	$	-
390095	Replace Asphalt Concrete Surfacing	CY		x		=	$	-
15312X	Remove Concrete	LF/CY/LS		x		=	$	-
394090	Place Hot Mix Asphalt (Miscellaneous Area)	SQYD	298	x	45.00	=	$	13,410
398200	Cold Plane Asphalt Concrete Pavement	SQYD	489,594	x	5.00	=	$	2,447,970
39405X	Shoulder Rumble Strip (HMA, X-In Indentations)	STA		x		=	$	-
413113	Repair Spalled Joints, Polyester Grout	SQYD		x		=	$	-
420102	Groove Existing Concrete Pavement	SQYD		x		=	$	-
390136	Minor Hot Mix Asphalt	TON		x		=	$	-
394095	Roadside Paving (Miscellaneous Areas)	SQYD		x		=	$	-
XXXXXX	Some Item	Unit		x		=	$	-

TOTAL PAVEMENT STRUCTURAL SECTION ITEMS $ 18,725,300

SECTION 3: DRAINAGE

Item code		Unit	Quantity		Unit Price ($)			Cost
15080X	Remove Culvert	EA/LF		x		=	$	-
150820	Modify Inlet	EA		x		=	$	-
155232	Sand Backfill	CY		x		=	$	-
15020X	Abandon Culvert	EA/LF		x		=	$	-
152430	Adjust Inlet	LF		x		=	$	-
155003	Cap Inlet	EA		x		=	$	-
510501	Minor Concrete	CY		x		=	$	-
510502	Minor Concrete (Minor Structure)	CY		x		=	$	-
5105XX	Minor Concrete (Type XX)	CY		x		=	$	-
620XXX	XX" Alternative Pipe Culvert (Type X)	LF		x		=	$	-
6411XX	XX" Plastic Pipe	LF		x		=	$	-
65XXXX	XX" Reinforced Concrete Pipe (Type X)	LF		x		=	$	-
6650XX	XX" Corrugated Steel Pipe (0.XXX" Thick)	LF		x		=	$	-
68XXXX	XX" Plastic Pipe (Edge Drain)	LF		x		=	$	-
69011X	XX" Corrugated Steel Pipe Downdrain (0.XXX" Thick)	LF		x		=	$	-
70321X	XX" Corrugated Steel Pipe Inlet (0.XXX" Thick)	LF		x		=	$	-
70XXXX	XX" Corrugated Steel Pipe Riser (0.XXX" Thick)	LF		x		=	$	-
7050XX	XX" Steel Flared End Section	EA		x		=	$	-
703233	Grated Line Drain	LF		x		=	$	-
710210	Adjust Frame and Grate to Grade	EA	26	x	1,500.00	=	$	39,000
710238	Modify Drainage System	EA		x		=	$	-
710242	Modify Inlet Grate	EA	5	x	2,500.00	=	$	12,500
72XXXX	Rock Slope Protection (Type and Method)	CY/TON		x		=	$	-
72901X	Rock Slope Protection Fabric (Class X)	SQYD		x		=	$	-
721420	Concrete (Ditch Lining)	CY		x		=	$	-
721430	Concrete (Channel Lining)	CY		x		=	$	-
750001	Miscellaneous Iron and Steel	LB		x		=	$	-
750050	Inlet Grate	EA	5	x	1,000	=	$	5,000
75000X	Replace/Repair Overside Drain	LS	1	x	100,000.00	=	$	100,000

TOTAL DRAINAGE ITEMS $ 156,500

SECTION 4: SPECIALTY ITEMS

Item code		Unit	Quantity		Unit Price ($)			Cost
080050	Progress Schedule (Critical Path Method)	LS	1	x	10,000.00	=	$	10,000
582001	Sound Wall (Masonry Block)	SQFT		x		=	$	-
510530	Minor Concrete (Wall)	CY		x		=	$	-
15325X	Remove Sound Wall	LF/LS		x		=	$	-
141120	Treated Wood Waste	LB	311,614	x	0.12	=	$	37,394
146002	Contractor-Supplied Biologist	LS	1	x	35,000.00	=	$	35,000
153221	Remove Concrete Barrier	LF		x		=	$	-
150668	Remove Flared End Section	EA		x		=	$	-
8000XX	Chain Link Fence (Type XX)	LF		x		=	$	-
80XXXX	XX" Chain Link Gate (Type CL-6)	EA		x		=	$	-
832005	Midwest Guardrail System	LF	17,817	x	35.00	=	$	623,595
832070	Vegetation Control (Minor Concrete)	SQYD	9,898	x	60.00	=	$	593,880
839218	Double Midwest Guardrail System	LF	1,379	x	60.00	=	$	82,740
839301	Single Thrie Beam Barrier	LF		x		=	$	-
839310	Double Thrie Beam Barrier	LF		x		=	$	-
839521	Cable Railing	LF		x		=	$	-
8395XX	Terminal System (Type CAT)	EA		x		=	$	-
839543	Transition Railing (Type WB-31)	EA	29	x	5,000.00	=	$	145,000
839576	End Cap (Type A)	EA	7	x	350.00	=	$	2,450
839581	End Anchor Assembly (Type SFT)	EA	21	x	1,000.00	=	$	21,000
839584	Alternative In-line Terminal System	EA	25	x	3,500.00	=	$	87,500
8396XX	Alternate Median Terminal	EA	12	x	12,000.00	=	$	144,000
839752	Remove Guardrail	LF	17,807	x	4.00	=	$	71,228
4906XX	CIDH Concrete Piling (Insert Diameter)	LF		x		=	$	-
839XXX	Crash Cushion (Type TAU XX)	EA	4	x	25,000.00	=	$	100,000
83XXXX	Concrete Barrier (Insert Type)	LF		x		=	$	-
520103	Bar Reinforced Steel (Retaining Wall)	LB		x		=	$	-
510060	Structural Concrete, Retaining Wall	CY		x		=	$	-
513553	Retaining Wall (Masonry Wall)	SQFT		x		=	$	-
511035	Architectural Treatment	SQFT		x		=	$	-
598001	Anti-Graffiti Coating	SQFT		x		=	$	-
203070	Rock Stain	SQFT		x		=	$	-
5136XX	Reinforced Concrete Crib Wall (Type X)	SQFT		x		=	$	-
83954X	Transition Railing (Type X)	EA		x		=	$	-
597601	Prepare and Stain Concrete	SQFT		x		=	$	-
839561	Rail Tensioning Assembly	EA		x		=	$	-
83958X	End Anchor Assembly (Type X)	EA		x		=	$	-
XXXXXX	Some Item	Unit		x		=	$	-

TOTAL SPECIALTY ITEMS $ 1,953,800

EA: 01-0F8200 PID: 116000067

SECTION 5: ENVIRONMENTAL

5A - ENVIRONMENTAL MITIGATION

Item code		Unit	Quantity		Unit Price ($)			Cost
	Biological Mitigation	LS		x		=	$	-
130670	Temporary Reinforced Silt Fence	LF		x		=	$	-
160109	Temporary High-Visibility Fence	LF	21,943	x	5.00	=	$	109,715
XXXXXX	Coastal Development Permit	LS		x		=	$	-
					Subtotal Environmental Mitigation		*$*	*109,715*

5B - LANDSCAPE AND IRRIGATION

Item code		Unit	Quantity		Unit Price ($)			Cost
20XXXX	Highway Planting	LS		x		=	$	-
20XXXX	Irrigation System	LS		x		=	$	-
204099	Plant Establishment Work	LS		x		=	$	-
204101	Extend Plant Establishment Work	LS		x		=	$	-
20XXXX	Follow-up Landscape Project	LS		x		=	$	-
150685	Remove Irrigation Facility	LS		x		=	$	-
20XXXX	Maintain Existing (Irrigation or Planted Areas)	LS		x		=	$	-
206400	Check and Test Existing Irrigation Facilities	LS		x		=	$	-
21011X	Imported Topsoil (X)	CY/TON		x		=	$	-
20XXXX	Rock Blanket, Rock Mulch, DG, Gravel Mulch	SQFT/SQYD		x		=	$	-
200122	Weed Germination	SQYD		x		=	$	-
208304	Water Meter	EA		x		=	$	-
2087XX	XX" Conduit (Use for Irrigation x-overs)	LF		x		=	$	-
20890X	Extend X" Conduit (Use for Extension of Irrigation	LF		x		=	$	-
					Subtotal Landscape and Irrigation		*$*	*-*

5C - EROSION CONTROL

Item code		Unit	Quantity		Unit Price ($)			Cost
210010	Move In/Move Out (Erosion Control)	EA	2	x	1200	=	$	2,400
210270	Rolled Erosion Control Product (Netting)	SQFT	1,000	x	3	=	$	3,000
210300	Hydromulch	SQFT	5,000	x	0.25	=	$	1,250
210350	Fiber Rolls	LF	1,000	x	10	=	$	10,000
210360	Compost Sock	LF		x		=	$	-
21025X	Bonded Fiber Matrix	SQFT/ACRE		x		=	$	-
210420	Straw	SQFT		x		=	$	-
210430	Hydroseed	SQFT	5,000	x	0.3	=	$	1,500
210600	Compost	SQFT		x		=	$	-
210630	Incorporate Materials	SQFT		x		=	$	-
					Subtotal Erosion Control		*$*	*18,150*

5D - NPDES

Item code		Unit	Quantity		Unit Price ($)			Cost
130300	Prepare SWPPP	LS		x		=	$	-
130200	Prepare WPCP	LS	1	x	2,000.00	=	$	2,000
130100	Job Site Management	LS	1	x	40,000.00	=	$	40,000
130330	Storm Water Annual Report	EA		x		=	$	-
130310	Rain Event Action Plan (REAP)	EA		x		=	$	-
130320	Storm Water Sampling and Analysis Day	EA		x		=	$	-
130520	Temporary Hydraulic Mulch	SQYD		x		=	$	-
130550	Temporary Hydroseed	SQYD		x		=	$	-
130505	Move-In/Move-Out (Temporary Erosion Control)	EA		x		=	$	-
130640	Temporary Fiber Roll	LF	20,000	x	5.00	=	$	100,000
130900	Temporary Concrete Washout	LS	1	x	1,500.00	=	$	1,500
130710	Temporary Construction Entrance	EA		x		=	$	-
130610	Temporary Check Dam	LF		x		=	$	-
130620	Temporary Drainage Inlet Protection	EA	118	x	150.00	=	$	17,700
130730	Street Sweeping	LS	1	x	50,000.00	=	$	50,000
					Subtotal NPDES		*$*	*211,200*

TOTAL ENVIRONMENTAL	**$**	**339,100**

Supplemental Work for NPDES

066595	Water Pollution Control Maintenance Sharing*	LS	1	x	3,000.00	=	$	3,000
066596	Additional Water Pollution Control**	LS	1	x	1,500.00	=	$	1,500
066597	Storm Water Sampling and Analysis***	LS	1	x	1,100.00	=	$	1,100
XXXXXX	Some Item	LS		x		=	$	-
					Subtotal Supplemental Work for NDPS		*$*	*5,600*

*Applies to all SWPPPs and those WPCPs with sediment control or soil stabilization BMPs.

**Applies to both SWPPPs and WPCP projects.

*** Applies only to project with SWPPPs.

SECTION 6: TRAFFIC ITEMS

6A - Traffic Electrical

Item code		Unit	Quantity		Unit Price ($)			Cost
860460	Lighting and Sign Illumination	LS		x		=	$	-
860201	Signal and Lighting	LS		x		=	$	-
860990	Closed Circuit Television System	LS		x		=	$	-
86110X	Ramp Metering System (Location X)	LS		x		=	$	-
86070X	Interconnection Conduit and Cable	LF/LS		x		=	$	-
5602XX	Furnish Sign Structure (Type X)	LB		x		=	$	-
5602XX	Install Sign Structure (Type X)	LB		x		=	$	-
498040	XX" CIDHC Pile (Sign Foundation)	LF		x		=	$	-
8609XX	Traffic Monitoring Station (Type X)	LS		x		=	$	-
15075X	Remove Sign Structure	EA/LS		x		=	$	-
872130	Modifying Existing Electrical System	LS	1	x	50,000.00	=	$	50,000
151581	Reconstruct Sign Structure	EA		x		=	$	-
152641	Modify Sign Structure	EA		x		=	$	-
860090	Maintain Existing Traffic Management System Elements During Construction	LS		x		=	$	-
86XXXX	Fiber Optic Conduit System	LS		x		=	$	-
XXXXX	Some Item	Unit		x		=	$	-

Subtotal Traffic Electrical *$* *50,000*

6B - Traffic Signing and Striping

Item code		Unit	Quantity		Unit Price ($)			Cost
566011	Roadside Sign - One Post	EA		x		=	$	-
566012	Roadside Sign - Two Post	EA		x		=	$	-
5602XX	Furnish Sign	SQFT		x		=	$	-
568016	Install Sign Panel on Existing Frame	SQFT		x		=	$	-
150711	Remove Painted Traffic Stripe	LF		x		=	$	-
141101	Remove Yellow Painted Traffic Stripe	LF		x		=	$	-
150712	Remove Painted Pavement Marking	SQFT		x		=	$	-
150742	Remove Roadside Sign	EA		x		=	$	-
152320	Reset Roadside Sign	EA		x		=	$	-
152390	Relocate Roadside Sign	EA		x		=	$	-
810120	Remove Pavement Marker	EA	6,156	x	2.00	=	$	12,312
810230	Pavement Marker (Retroreflective)	EA	11,193	x	5.00	=	$	55,965
82010X	Delineator (Class X)	EA		x		=	$	-
820310	Remove Roadside Sign Panel	LS	1	x	200,000.00	=	$	200,000
820900	Install Roadside Sign Panel on Existing Post	LS	1	x	350,000.00	=	$	350,000
846030	Remove Thermoplastic Pavement Stripe	LF	34,685	x	2.00	=	$	69,370
846035	Remove Thermoplastic Pavement Marking	SQFT	7,777	x	5.00	=	$	38,885
846046	6" Rumble Stripe (Asphalt Concrete Pavement)	STA	776	x	25.00	=	$	19,400
846051	12" Rumble Stripe (Asphalt Concrete Pavement)	STA	2,553	x	25.00	=	$	63,825
846007	6" Thermoplastic Traffic Stripe (Enhanced Wet Night Visibility)	LF	670,415	x	1.00	=	$	670,415
846009	8" Thermoplastic Traffic Stripe (Enhanced Wet Night Visibility)	LF	14,273	x	2.00	=	$	28,546
840516	Thermoplastic Crosswalk and Pavement Marking (Enhanced Wet Night Visibility)	SQFT	7,777	x	10.00	=	$	77,770
120090	Construction Area Signs	LS	1	x	10,000.00	=	$	10,000
84XXXX	Permanent Pavement Delineation	LS		x		=	$	-

Subtotal Traffic Signing and Striping *$* *1,596,488*

6C - Traffic Management Plan

Item code		Unit	Quantity		Unit Price ($)			Cost
128652	Portable Changeable Message Signs	LS	1	x	$ 30,000	=	$	30,000

Subtotal Traffic Management Plan *$* *30,000*

6C - Stage Construction and Traffic Handling

Item code		Unit	Quantity		Unit Price ($)			Cost
120199	Traffic Plastic Drum	EA		x		=	$	-
12016X	Channelizer (Type X)	EA		x		=	$	-
120120	Type III Barricade	EA		x		=	$	-
129100	Temporary Crash Cushion Module	EA		x		=	$	-
120100	Traffic Control System	LS	1	x	627,000.00	=	$	627,000
120159	Temporary Traffic Stripe (Paint)	LF	684,688	x	0.30	=	$	205,406
129110	Temporary Crash Cushion	EA		x		=	$	-
129000	Temporary Railing (Type K)	LF	760	x	50.00	=	$	38,000
129090A	Alternative Temporary Crash Cushion	EA	20	x	5,000.00	=	$	100,000
120149	Temporary Pavement Marking (Paint)	SQFT		x		=	$	-
82010X	Delineator (Class X)	EA	126	x	20.00	=	$	2,520
XXXXXX	Some Item	Unit		x		=	$	-

Subtotal Stage Construction and Traffic Handling *$* *972,926*

TOTAL TRAFFIC ITEMS **$** **2,649,500**

SECTION 7: DETOURS

Includes constructing, maintaining, and removal

Item code		Unit	Quantity		Unit Price ($)			Cost
190101	Roadway Excavation	CY		x		=	$	-
19801X	Imported Borrow	CY/TON		x		=	$	-
390132	Hot Mix Asphalt (Type A)	TON		x		=	$	-
26020X	Class 2 Aggregate Base	TON/CY		x		=	$	-
250401	Class 4 Aggregate Subbase	CY		x		=	$	-
130620	Temporary Drainage Inlet Protection	EA		x		=	$	-
129000	Temporary Railing (Type K)	LF		x		=	$	-
128601	Temporary Signal System	LS		x		=	$	-
120149	Temporary Pavement Marking (Paint)	SQFT		x		=	$	-
80010X	Temporary Fence (Type X)	LF		x		=	$	-
XXXXXX	Some Item	LS		x		=	$	-

* Includes constructing, maintaining, and removal

TOTAL DETOURS $ -

SUBTOTAL SECTIONS 1 through 7 $ 24,462,700

SECTION 8: MINOR ITEMS

8A - Americans with Disabilities Act Items							
ADA Items				0.0%		$	-
8B - Bike Path Items							
Bike Path Items				1.0%		$	244,627
8C - Other Minor Items							
Other Minor Items				4.0%		$	978,508
Total of Section 1-7	$	24,462,700	x	5.0%	=	$	1,223,135

TOTAL MINOR ITEMS $ 1,223,200

SECTIONS 9: ROADWAY MOBILIZATION

Item code								
999990	Total Section 1-8	$	25,685,900	x	10%	=	$	2,568,590

TOTAL ROADWAY MOBILIZATION $ 2,568,600

SECTION 10: SUPPLEMENTAL WORK

Item code		Unit	Quantity		Unit Price ($)			Cost
066670	Payment Adjustments For Price Index Fluctuations	LS	1	x	709,413.20	=	$	709,413
066094	Value Analysis	LS	1	x	10,000.00	=	$	10,000
066070	Maintain Traffic	LS	1	x	407,000.00	=	$	407,000
066916	Construction General Permit Fees	LS	1	x	518.00	=	$	518
066919	Dispute Resolution Board	LS	1	x	7,500.00	=	$	7,500
066921	Dispute Resolution Advisor	LS		x		=	$	-
066015	Federal Trainee Program	LS		x		=	$	-
066610	Partnering	LS	1	x	50,000.00	=	$	50,000
066204	Remove Rock and Debris	LS		x		=	$	-
066222	Locate Existing Crossover	LS		x		=	$	-
066395	Smoothness Incentive Lump Sum	LS	1	x	346,135.50	=	$	346,136
XXXXXX	Some Item	Unit		x		=	$	-
	*Cost of **NPDES** Supplemental Work specified in Section 5D*					=	$	5,600
	Total Section 1-8	$	25,685,900		5%	=	$	1,284,295

TOTAL SUPPLEMENTAL WORK $ 2,820,500

SECTION 11: STATE FURNISHED MATERIALS AND EXPENSES

Item code		Unit	Quantity		Unit Price ($)		Cost
066105	Resident Engineers Office	LS	1	x	209,700.00	=	$209,700
066063	Traffic Management Plan - Public Information	LS	1	x	2,000.00	=	$2,000
066901	Water Expenses	LS		x		=	$0
8609XX	Traffic Monitoring Station (X)	LS		x		=	$0
066841	Traffic Controller Assembly	LS		x		=	$0
066840	Traffic Signal Controller Assembly	LS		x		=	$0
066062	COZEEP Contract	LS	1	x	616,000.00	=	$616,000
066838	Reflective Numbers and Edge Sealer	LS		x		=	$0
066065	Tow Truck Service Patrol	LS		x		=	$0
066916	Annual Construction General Permit Fee	LS		x		=	$0
XXXXXX	Some Item	Unit		x		=	$0
	Total Section 1-8	$	25,685,900		2%	=	$ 513,718

TOTAL STATE FURNISHED $1,341,500

SECTION 12: TIME-RELATED OVERHEAD

Total of Roadway and Structures Contract Items excluding Mobilization	$25,882,550	(used to calculate TRO)
Total Construction Cost (excluding TRO and Contingency)	$32,630,250	(used to check if project is greater than $5 million excluding contingency)

Estimated Time-Related Overhead (TRO) Percentage (0% to 10%) = **10%**

Item code		Unit	Quantity		Unit Price ($)		Cost
090100	Time-Related Overhead	WD	220	X	$11,765	=	$2,588,300

TOTAL TIME-RELATED OVERHEAD $2,588,300

SECTION 13: ROADWAY CONTINGENCY

Total Section 1-12	$	35,004,800	x	**15%**	=	$5,250,720

TOTAL CONTINGENCY $5,250,800

II. STRUCTURE ITEMS

	Concrete Barrier Transition		**Concrete Barrier Transition**		**Concrete Barrier Transition**
DATE OF ESTIMATE	05/17/19		05/17/19		05/17/19
Name	School Rd OC NB Right Approach		Hiller Rd OC NB Right Approach		Murray Rd OC NB Right Approach
Bridge Number	04-0168		04-0173		04-0170
Total Length (Feet)	6 LF		6 LF		6 LF
Cost Per Linear Foot	$1,500		$1,500		$1,500
COST OF EACH	**$9,000**		**$9,000**		**$9,000**

	Concrete Barrier Transition		**Concrete Barrier Transition**		**Concrete Barrier Transition**
DATE OF ESTIMATE	05/17/19		05/17/19		05/17/19
Name	Airport Rd UC NB Right Approach		North Central Ave UC NB Right Approach		Crannel Rd OC NB Right Approach
Bridge Number	04-0169R		04-0095R		04-0073
Total Length (Feet)	6 LF		6 LF		6 LF
Cost Per Linear Foot	$1,500		$1,500		$1,500
COST OF EACH	**$9,000**		**$9,000**		**$9,000**

	Concrete Barrier Transition		**Concrete Barrier Transition**		**Concrete Barrier Transition**
DATE OF ESTIMATE	05/17/19		05/17/19		05/17/19
Name	Little River Bridge NB Right Approach		Seawood Dr UC NB Right Approach		Patricks Point UC NB Right Approach & Departure
Bridge Number	04-0026		04-0209		04-0210
Total Length (Feet)	6 LF		6 LF		12 LF
Cost Per Linear Foot	$1,500		$1,500		$1,500
COST OF EACH	**$9,000**		**$9,000**		**$18,000**

	Concrete Barrier Transition		**Concrete Barrier Transition**		**Concrete Barrier Transition**
DATE OF ESTIMATE	05/17/19		05/17/19		05/17/19
Name	Big Lagoon Bridge NB Right Departure		School Rd OC SB Right Approach		Hiller Rd OC SB Right Approach
Bridge Number	04-0027		04-0168		04-0173
Total Length (Feet)	6 LF		6 LF		6 LF
Cost Per Linear Foot	$1,500		$1,500		$1,500
COST OF EACH	**$9,000**		**$9,000**		**$9,000**

	Concrete Barrier Transition		**Concrete Barrier Transition**		**Concrete Barrier Transition**
DATE OF ESTIMATE	05/17/19		05/17/19		05/17/19
Name	Murray Rd OC SB Right Approach		North Central Ave UC SB Right Approach		Crannel Rd OC SB Right Approach
Bridge Number	04-0170		04-0095L		04-0073
Total Length (Feet)	6 LF		6 LF		6 LF
Cost Per Linear Foot	$1,500		$1,500		$1,500
COST OF EACH	**$9,000**		**$9,000**		**$9,000**

	Concrete Barrier Transition		**Concrete Barrier Transition**		**Concrete Barrier Transition**
DATE OF ESTIMATE	**43602**		05/17/19		05/17/19
Name	Seawood Dr UC SB Right Approach		Patricks Point UC SB Right Approach		Big Lagoon Bridge SB Right Departure
Bridge Number	04-0209		04-0210		04-0027
Total Length (Feet)	6 LF		6 LF		6 LF
Cost Per Linear Foot	$1,500		$1,500		$1,500
COST OF EACH	**$9,000**		**$9,000**		**$9,000**

TOTAL COST OF BRIDGES		**$171,000**
STRUCTURES MOBILIZATION	10%	**$17,100**
STRUCTURES CONTINGENCY	15%	**$25,650**
TOTAL COST OF STRUCTURES		**$213,750**

EA: 01-0F8200 PID: 116000067

III. RIGHT OF WAY

Fill in all of the available information from the Right of Way Data Sheet.

A)	A1)	Acquisition, including Excess Land Purchases, Damages & Goodwill, Fees		$	0
	A2)	SB-1210		$	0
B)	Acquisition of Offsite Mitigation			$	0
C)	C1)	Utility Relocation (State Share)		$	0
	C2)	Potholing (Design Phase)		$	0
D)	Railroad Acquisition			$	0
E)	Clearance / Demolition			$	0
F)	Relocation Assistance (RAP and/or Last Resort Housing Costs)			$	0
G)	Title and Escrow			$	0
H)	Environmental Review			$	0
I)	Condemnation Settlements		0%	$	0
J)	Design Appreciation Factor		0%	$	0
K)	Utility Relocation (Construction Cost)			$	10,000

L)	**TOTAL RIGHT OF WAY ESTIMATE**	**$10,000**
M)	**TOTAL R/W ESTIMATE: Escalated**	**$10,800**

Attachment F
INITIAL SITE ASSESSMENT

This Page Intentionally Left Blank

State of California
DEPARTMENT OF TRANSPORTATION

California State Transportation Agency

M e m o r a n d u m

Making Conservation a California Way of Life

To: Joe Ostdiek
Project Engineer
Dokken Engineering

Date: January 28, 2019

File: Trinidad CAPM
1-HUM-101-PM
R90.1/109.6
01-0F820/01 1600 0067

From: Christian Figueroa
North Region Environmental

SUBJECT: INITIAL SITE ASSESSMENT

An Initial Site Assessment (ISA) was conducted for the "Trinidad CAPM" project as you requested. It is understood that the proposed work is to rehabilitate failing HMA dig outs and apply a gap graded RHMA-G overlay along Route 101, including entrance and exit ramps, a vista point, and a park-and-ride facility within the project limits. Additional work includes placing shoulder backfill, dike replacement, cold-planing conforms where required, upgrading existing Metal Beam Guard Rail (MBGR) to Midwest Guardrail System (MGS) as necessary, and upgrading partially functioning continuous Vehicle Classification Stations (VCS) to fully functional status.

Aerially Deposited Lead (ADL), which is commonly found in all highway shoulders, may be at a level that requires special handling of excess material. This could include restricted disposal to a commercial hazardous waste facility. It is not anticipated, however, if ADL present at the project site is at a high enough concentration it would be subject to further requirements of the Caltrans/DTSC ADL agreement for handling ADL contaminated soils. Due to the nature of the proposed work, this issue can be addressed with SSP 7-1.02K (6)(j)(iii) **EARTH MATERIAL CONTAINING LEAD** and a Lead Compliance Plan contract item.

Treated Wood Waste (TWW) will be generated from guard rail removal. This can be addressed with SSP 14-11.14 **TREATED WOOD WASTE** management in the construction contract and a TWW disposal contract item.

An additional SSP will be required for thermoplastic stripe grinding or removal. These issues can be addressed with SSP 36-4 **CONTAINING LEAD FROM PAINT AND THERMOPLASTIC** and a Lead Compliance Plan contract item.

Note that the ISA found that the project work site is not on the *Hazardous Waste and Substances Site List (Cortese List)*.

If there are any changes to the scope of the project, please send an e-mail or letter describing the changes so that an evaluation can be made for possible hazardous waste issues that could affect your project.

cc: 1-CFigueroa 2-JOstdiek 3-File
CXF:cf

Attachment G

EXISTING PAVEMENT DATA

(PaveM)

This Page Intentionally Left Blank

PaveM Scenario Used: #2671
APCS Data Year: 2016

Caltrans Pavement Program
Pavement Condition Summary Report (PaveM)
BOTH DIRECTIONS; ALL LANES

District: 1; County: Humboldt (HUM); Route: 101

From PM: R90.100 To PM: 109.600

L-Length: 19.423. R-Length: 19.423

L-Lane Miles: 38.763. R-Lane Miles: 38.156 (Unknown lane miles: 0.000)

	Traditional Condition (lane miles)					MAP-21 Condition (lane miles)				Effectiveness (%)	
Year/ Condition Lane Miles	Green	Yellow	Blue	Orange	Red	Good	Fair	Poor	Total Lane Miles	SHOPP Effectiveness ((Red + Orange) /Total Lane Miles) %	Rehab Effectiveness (Red/Total Lane Miles) %
2015	10.881	33.471	0.000	28.296	4.271	34.130	42.789	0.000	76.919	42.34	5.55

End Previous Years Actuals - Begin APCS Data Collection Year and Predicted Years

2016	39.812	36.065	0.000	1.042	0.000	60.272	16.647	0.000	76.919	1.35	0.00
2017	30.163	45.316	0.000	1.440	0.000	49.402	27.517	0.000	76.919	1.87	0.00
2018	12.037	61.855	0.000	3.027	0.000	43.947	32.972	0.000	76.919	3.94	0.00
2019	5.686	65.543	0.000	5.690	0.000	34.342	42.577	0.000	76.919	7.40	0.00
2020	0.000	65.898	0.000	11.021	0.000	22.742	54.177	0.000	76.919	14.33	0.00
2021	0.000	51.344	0.000	25.575	0.000	14.012	62.907	0.000	76.919	33.25	0.00
2022	0.000	31.874	0.000	44.690	0.355	5.463	71.456	0.000	76.919	58.56	0.46
2023	0.000	27.506	0.000	49.058	0.355	3.605	73.314	0.000	76.919	64.24	0.46
2024	0.000	21.917	0.000	54.410	0.592	1.862	74.952	0.105	76.919	71.51	0.77
2025	0.000	8.890	0.000	66.483	1.546	0.000	76.814	0.105	76.919	88.44	2.01
2026	0.000	0.464	0.000	74.909	1.546	0.000	76.814	0.105	76.919	99.40	2.01
2027	0.000	0.000	0.000	70.468	6.451	0.000	76.708	0.211	76.919	100.00	8.39
2028	0.000	0.000	0.000	58.467	18.452	0.000	76.516	0.403	76.919	100.00	23.99
2029	0.000	0.000	0.000	43.589	33.330	0.000	76.516	0.403	76.919	100.00	43.33
2030	0.000	0.000	0.000	38.766	38.153	0.000	76.516	0.403	76.919	100.00	49.60

This Page Intentionally Left Blank

PaveM Scenario Used: #2671
APCS Data Year: 2016
Using: Prior-Treatment Distresses

Caltrans Pavement Program
Pavement Condition Detailed Report (PaveM)

District: 1; County: Humboldt (HUM); Route: 101

From PM: R90.100 To PM: 109.600

Year: 2019 (Predicted)

R-Length: 19.423. L-Length: 19.423

R-Lane Miles: 38.156. L-Lane Miles: 38.763 (Unknown lane miles: 0.000)

Pavement Segment	Lane	Type	Concrete			Asphalt			IRI in/mi	MAP-21 Condition	Traditional Condition	Road Class	Estimated Lane Miles
			1st%	3rd%	Fault%	Alligator A%	Alligator B%	Rut (in)					
Post Mile: R90.134 to R90.569 Length: 0.435 Estimated Lane Mileage: 0.870	L1	Flexible				3.70	1.40	0.09	89	Good	Yellow	1	0.435
	L2	Flexible				10.20	2.50	0.13	86	Good	Yellow	1	0.435
Post Mile: R90.100 to R90.134 Length: 0.034 Estimated Lane Mileage: 0.114	L1	Flexible				3.70	1.40	0.16	131	Fair	Yellow	1	0.029
	L2	Flexible				5.60	1.90	0.14	136	Fair	Yellow	1	0.029
	R1	Flexible				2.30	2.20	0.18	126	Fair	Green	1	0.028
	R2	Flexible				5.50	2.40	0.17	123	Fair	Yellow	1	0.028
Post Mile: R90.134 to R91.990 Length: 1.856 Estimated Lane Mileage: 3.712	R1	Flexible				9.40	8.30	0.16	90	Good	Yellow	1	1.856
	R2	Flexible				20.50	5.70	0.18	88	Good	Yellow	1	1.856
Post Mile: R90.569 to R91.990 Length: 1.421 Estimated Lane Mileage: 2.842	L1	Flexible				3.80	2.50	0.11	81	Good	Yellow	1	1.421
	L2	Flexible				12.40	4.50	0.16	81	Good	Yellow	1	1.421
Post Mile: R91.990 to R93.873 Length: 1.883 Estimated Lane Mileage: 3.724	L1	Flexible				2.70	2.50	0.10	71	Good	Yellow	1	1.862
	L2	Flexible				12.70	7.90	0.18	81	Good	Yellow	1	1.862
Post Mile: R91.990 to R93.852 Length: 1.862 Estimated Lane Mileage: 3.724	R1	Flexible				10.80	9.50	0.15	98	Fair	Yellow	1	1.862
	R2	Flexible				21.90	7.80	0.19	89	Good	Yellow	1	1.862
Post Mile: R93.873 to R94.479 Length: 0.606 Estimated Lane Mileage: 1.818	L1	Flexible				6.30	5.50	0.08	105	Fair	Yellow	1	0.606
	L2	Flexible				9.70	7.00	0.13	73	Good	Yellow	1	0.606
	L3	Flexible				13.40	9.10	0.18	79	Good	Yellow	1	0.606
Post Mile: R93.852 to R94.480 Length: 0.628 Estimated Lane Mileage: 1.214	R1	Flexible				9.20	12.60	0.13	106	Fair	Orange	1	0.607
	R2	Flexible				14.10	9.50	0.15	87	Fair	Yellow	1	0.607
Post Mile: R94.479 to R95.459 Length: 0.980 Estimated Lane Mileage: 1.960	L1	Flexible				7.50	12.00	0.11	79	Fair	Orange	1	0.980
	L2	Flexible				9.90	10.80	0.19	83	Fair	Orange	1	0.980
Post Mile: R94.480 to R95.620 Length: 1.140 Estimated Lane Mileage: 2.280	R1	Flexible				9.20	10.50	0.12	117	Fair	Orange	1	1.140
	R2	Flexible				16.40	5.50	0.15	93	Good	Yellow	1	1.140
Post Mile: R95.459 to R95.620 Length: 0.161 Estimated Lane Mileage: 0.322	L1	Flexible				4.00	4.10	0.09	96	Fair	Yellow	1	0.161
	L2	Flexible				11.70	16.40	0.19	101	Fair	Orange	1	0.161
Post Mile: R95.620 to R96.770 Length: 1.150 Estimated Lane Mileage: 4.512	L1	Flexible				7.10	5.30	0.10	71	Good	Yellow	1	1.128
	L2	Flexible				15.20	7.00	0.18	85	Good	Yellow	1	1.128
	R1	Flexible				9.60	9.10	0.10	97	Fair	Yellow	1	1.128
	R2	Flexible				16.20	9.40	0.15	90	Fair	Yellow	1	1.128
Post Mile: R96.770 to R97.020 Length: 0.250 Estimated Lane Mileage: 1.000	L1	Flexible				11.60	25.10	0.10	84	Fair	Orange	1	0.250
	L2	Flexible				10.20	16.80	0.13	83	Fair	Orange	1	0.250
	R1	Flexible				8.60	7.30	0.11	82	Good	Yellow	1	0.250
	R2	Flexible				15.70	6.60	0.15	95	Good	Yellow	1	0.250
Post Mile: R97.020 to R97.457 Length: 0.437 Estimated Lane Mileage: 1.748	L1	Flexible				6.90	11.10	0.09	83	Fair	Orange	1	0.437
	L2	Flexible				16.00	17.20	0.16	95	Fair	Orange	1	0.437
	R1	Flexible				5.80	3.90	0.12	83	Good	Yellow	1	0.437
	R2	Flexible				12.50	8.00	0.12	97	Fair	Yellow	1	0.437
Post Mile: R97.457 to 98.092 Length: 0.903 Estimated Lane Mileage: 1.608	L1	Flexible				7.00	3.60	0.14	111	Fair	Yellow	1	0.804
	L2	Flexible				7.80	4.20	0.10	104	Fair	Yellow	1	0.804

Post Mile: R97.457 to R97.747 Length: 0.290 Estimated Lane Mileage: 0.432	R1	Flexible				2.70	3.10	0.10	86	Good	Yellow	1	0.216
	R2	Flexible				4.40	4.40	0.11	86	Good	Yellow	1	0.216
Post Mile: 97.479 to 98.092 Length: 0.613 Estimated Lane Mileage: 1.176	R1	Flexible				4.30	3.20	0.09	106	Fair	Yellow	1	0.588
	R2	Flexible				9.00	3.50	0.11	99	Fair	Yellow	1	0.588
Post Mile: 98.092 to 98.681 Length: 0.589 Estimated Lane Mileage: 2.356	L1	Flexible				10.50	3.20	0.14	95	Fair	Yellow	1	0.589
	L2	Flexible				13.40	3.50	0.14	108	Fair	Yellow	1	0.589
	R1	Flexible				7.30	3.20	0.09	105	Fair	Yellow	1	0.589
	R2	Flexible				9.80	5.40	0.12	105	Fair	Yellow	1	0.589
Post Mile: 98.681 to 100.583 Length: 1.902 Estimated Lane Mileage: 7.608	L1	Flexible				6.60	3.20	0.12	88	Good	Yellow	1	1.902
	L2	Flexible				10.50	3.50	0.13	77	Good	Yellow	1	1.902
	R1	Flexible				8.40	3.20	0.12	84	Good	Yellow	1	1.902
	R2	Flexible				7.20	4.30	0.12	85	Good	Yellow	1	1.902
Post Mile: 100.583 to R101.604 Length: 1.021 Estimated Lane Mileage: 1.994	L1	Flexible				6.20	1.70	0.14	107	Fair	Yellow	1	0.997
	L2	Flexible				9.80	3.70	0.18	97	Fair	Yellow	1	0.997
Post Mile: 100.583 to R100.799 Length: 0.216 Estimated Lane Mileage: 0.384	R1	Flexible				5.40	5.20	0.13	114	Fair	Yellow	1	0.192
	R2	Flexible				9.10	6.30	0.16	128	Fair	Yellow	1	0.192
Post Mile: R100.799 to R101.237 Length: 0.438 Estimated Lane Mileage: 0.876	R1	Flexible				9.10	4.20	0.13	118	Fair	Yellow	1	0.438
	R2	Flexible				16.00	7.30	0.19	106	Fair	Yellow	1	0.438
Post Mile: R101.237 to R102.900 Length: 1.663 Estimated Lane Mileage: 3.326	R1	Flexible				2.80	1.90	0.14	104	Fair	Green	1	1.663
	R2	Flexible				8.10	2.90	0.20	88	Fair	Yellow	1	1.663
Post Mile: R101.604 to R103.378 Length: 1.774 Estimated Lane Mileage: 3.548	L1	Flexible				2.60	2.10	0.11	105	Fair	Green	1	1.774
	L2	Flexible				8.00	2.50	0.22	91	Fair	Yellow	1	1.774
Post Mile: R102.900 to R103.397 Length: 0.497 Estimated Lane Mileage: 0.956	R1	Flexible				2.60	1.80	0.15	100	Fair	Green	1	0.478
	R2	Flexible				13.80	2.70	0.18	90	Good	Yellow	1	0.478
Post Mile: R103.378 to R105.140 Length: 1.762 Estimated Lane Mileage: 3.486	L1	Flexible				3.30	2.50	0.12	95	Good	Yellow	1	1.743
	L2	Flexible				11.10	3.10	0.22	98	Fair	Yellow	1	1.743
Post Mile: R103.397 to R105.140 Length: 1.743 Estimated Lane Mileage: 3.486	R1	Flexible				3.00	1.70	0.16	85	Good	Green	1	1.743
	R2	Flexible				8.20	2.10	0.18	80	Good	Yellow	1	1.743
Post Mile: R105.140 to R106.285 Length: 1.145 Estimated Lane Mileage: 4.512	L1	Flexible				5.50	2.60	0.13	104	Fair	Yellow	1	1.128
	L2	Flexible				9.20	2.70	0.19	103	Fair	Yellow	1	1.128
	R1	Flexible				7.10	5.50	0.14	106	Fair	Yellow	1	1.128
	R2	Flexible				11.40	6.40	0.20	97	Fair	Yellow	1	1.128
Post Mile: 106.630 to 107.607 Length: 0.977 Estimated Lane Mileage: 1.954	L1	Flexible				13.50	2.90	0.20	100	Fair	Yellow	1	0.977
	L2	Flexible				22.00	2.80	0.22	115	Fair	Yellow	1	0.977
Post Mile: 106.630 to 108.220 Length: 1.590 Estimated Lane Mileage: 3.180	R1	Flexible				13.60	6.10	0.22	113	Fair	Yellow	1	1.590
	R2	Flexible				21.90	7.00	0.18	105	Fair	Yellow	1	1.590
Post Mile: 107.607 to 108.220 Length: 0.613 Estimated Lane Mileage: 1.226	L1	Flexible				16.00	3.50	0.20	92	Good	Yellow	1	0.613
	L2	Flexible				17.30	3.30	0.17	116	Fair	Yellow	1	0.613
Post Mile: 108.220 to 109.257 Length: 1.037 Estimated Lane Mileage: 3.812	L1	Flexible				8.10	3.40	0.16	95	Good	Yellow	1	0.953
	L2	Flexible				15.80	6.40	0.21	117	Fair	Yellow	1	0.953
	R1	Flexible				9.20	5.20	0.17	100	Fair	Yellow	1	0.953
	R2	Flexible				16.90	7.20	0.18	109	Fair	Yellow	1	0.953
Post Mile: 109.257 to 109.494 Length: 0.237 Estimated Lane Mileage: 0.948	L1	Flexible				5.50	2.70	0.10	93	Good	Yellow	1	0.237
	L2	Flexible				10.00	7.80	0.18	100	Fair	Yellow	1	0.237
	R1	Flexible				5.50	3.80	0.14	80	Good	Yellow	1	0.237
	R2	Flexible				13.80	16.60	0.11	96	Fair	Orange	1	0.237
Post Mile: 109.494 to 109.600 Length: 0.106 Estimated Lane Mileage: 0.211	L1	Flexible				21.90	21.30	0.19	203	Fair	Orange	1	0.105
	R1	Flexible				17.40	10.70	0.17	145	Fair	Orange	1	0.106
						10.07	**5.24**	**0.15**	**94**				**76.919**
			Lane Weighted Average										Total

PaveM Scenario Used: #2671
APCS Data Year: 2016
Using: Prior-Treatment Distresses

Caltrans Pavement Program
Pavement Condition Detailed Report (PaveM)

District: 1; County: Humboldt (HUM); Route: 101

From PM: R90.100 To PM: 109.600

Year: 2020 (Predicted)

R-Length: 19.423. L-Length: 19.423

R-Lane Miles: 38.156. L-Lane Miles: 38.763 (Unknown lane miles: 0.000)

Pavement Segment	Lane	Type	Concrete			Asphalt			IRI in/mi	MAP-21 Condition	Traditional Condition	Road Class	Estimated Lane Miles
			1st%	3rd%	Fault%	Alligator A%	Alligator B%	Rut (in)					
Post Mile: R90.134 to R90.569 Length: 0.435 Estimated Lane Mileage: 0.870	L1	Flexible				5.10	2.20	0.09	93	Good	Yellow	1	0.435
	L2	Flexible				12.60	3.80	0.13	91	Good	Yellow	1	0.435
Post Mile: R90.100 to R90.134 Length: 0.034 Estimated Lane Mileage: 0.114	L1	Flexible				5.10	2.20	0.16	135	Fair	Yellow	1	0.029
	L2	Flexible				7.60	3.20	0.14	141	Fair	Yellow	1	0.029
	R1	Flexible				3.50	3.10	0.18	130	Fair	Yellow	1	0.028
	R2	Flexible				7.50	3.70	0.17	128	Fair	Yellow	1	0.028
Post Mile: R90.134 to R91.990 Length: 1.856 Estimated Lane Mileage: 3.712	R1	Flexible				10.90	9.80	0.16	94	Fair	Yellow	1	1.856
	R2	Flexible				23.10	7.40	0.18	94	Good	Yellow	1	1.856
Post Mile: R90.569 to R91.990 Length: 1.421 Estimated Lane Mileage: 2.842	L1	Flexible				5.10	3.50	0.11	85	Good	Yellow	1	1.421
	L2	Flexible				14.90	6.10	0.16	87	Good	Yellow	1	1.421
Post Mile: R91.990 to R93.873 Length: 1.883 Estimated Lane Mileage: 3.724	L1	Flexible				3.80	3.60	0.10	75	Good	Yellow	1	1.862
	L2	Flexible				15.00	9.80	0.18	87	Fair	Yellow	1	1.862
Post Mile: R91.990 to R93.852 Length: 1.862 Estimated Lane Mileage: 3.724	R1	Flexible				12.40	11.00	0.15	102	Fair	Orange	1	1.862
	R2	Flexible				24.20	9.80	0.19	94	Fair	Yellow	1	1.862
Post Mile: R93.873 to R94.479 Length: 0.606 Estimated Lane Mileage: 1.818	L1	Flexible				7.80	6.80	0.08	109	Fair	Yellow	1	0.606
	L2	Flexible				11.20	8.40	0.13	77	Good	Yellow	1	0.606
	L3	Flexible				15.60	11.20	0.18	84	Fair	Orange	1	0.606
Post Mile: R93.852 to R94.480 Length: 0.628 Estimated Lane Mileage: 1.214	R1	Flexible				10.60	14.30	0.13	110	Fair	Orange	1	0.607
	R2	Flexible				16.30	11.50	0.15	92	Fair	Orange	1	0.607
Post Mile: R94.479 to R95.459 Length: 0.980 Estimated Lane Mileage: 1.960	L1	Flexible				8.90	13.60	0.11	83	Fair	Orange	1	0.980
	L2	Flexible				12.00	12.90	0.19	88	Fair	Orange	1	0.980
Post Mile: R94.480 to R95.620 Length: 1.140 Estimated Lane Mileage: 2.280	R1	Flexible				10.70	12.00	0.12	121	Fair	Orange	1	1.140
	R2	Flexible				18.90	7.30	0.15	98	Fair	Yellow	1	1.140
Post Mile: R95.459 to R95.620 Length: 0.161 Estimated Lane Mileage: 0.322	L1	Flexible				5.30	5.30	0.09	100	Fair	Yellow	1	0.161
	L2	Flexible				13.70	18.80	0.19	107	Fair	Orange	1	0.161
Post Mile: R95.620 to R96.770 Length: 1.150 Estimated Lane Mileage: 4.512	L1	Flexible				8.60	6.60	0.10	75	Good	Yellow	1	1.128
	L2	Flexible				17.60	8.90	0.18	90	Good	Yellow	1	1.128
	R1	Flexible				11.10	10.60	0.10	101	Fair	Orange	1	1.128
	R2	Flexible				18.60	11.40	0.15	96	Fair	Orange	1	1.128
Post Mile: R96.770 to R97.020 Length: 0.250 Estimated Lane Mileage: 1.000	L1	Flexible				12.90	27.00	0.10	88	Fair	Orange	1	0.250
	L2	Flexible				12.10	19.20	0.13	88	Fair	Orange	1	0.250
	R1	Flexible				10.10	8.70	0.11	86	Good	Yellow	1	0.250
	R2	Flexible				18.10	8.50	0.15	100	Fair	Yellow	1	0.250
Post Mile: R97.020 to R97.457 Length: 0.437 Estimated Lane Mileage: 1.748	L1	Flexible				8.30	12.70	0.09	87	Fair	Orange	1	0.437
	L2	Flexible				17.90	19.60	0.16	101	Fair	Orange	1	0.437
	R1	Flexible				7.20	5.10	0.12	87	Good	Yellow	1	0.437
	R2	Flexible				14.70	10.00	0.12	102	Fair	Yellow	1	0.437
Post Mile: R97.457 to 98.092 Length: 0.903 Estimated Lane Mileage: 1.608	L1	Flexible				9.70	5.70	0.14	115	Fair	Yellow	1	0.804
	L2	Flexible				11.00	6.60	0.10	109	Fair	Yellow	1	0.804

Post Mile: R97.457 to R97.747 Length: 0.290 Estimated Lane Mileage: 0.432	R1	Flexible				3.90	4.10	0.10	90	Good	Yellow	1	0.216
	R2	Flexible				6.30	6.00	0.11	92	Good	Yellow	1	0.216
Post Mile: 97.479 to 98.092 Length: 0.613 Estimated Lane Mileage: 1.176	R1	Flexible				6.70	5.20	0.09	110	Fair	Yellow	1	0.588
	R2	Flexible				12.30	5.70	0.11	105	Fair	Yellow	1	0.588
Post Mile: 98.092 to 98.681 Length: 0.589 Estimated Lane Mileage: 2.356	L1	Flexible				13.70	5.20	0.14	99	Fair	Yellow	1	0.589
	L2	Flexible				17.10	5.70	0.14	113	Fair	Yellow	1	0.589
	R1	Flexible				10.20	5.20	0.09	109	Fair	Yellow	1	0.589
	R2	Flexible				13.00	8.00	0.12	110	Fair	Yellow	1	0.589
Post Mile: 98.681 to 100.583 Length: 1.902 Estimated Lane Mileage: 7.608	L1	Flexible				9.40	5.20	0.12	92	Good	Yellow	1	1.902
	L2	Flexible				14.10	5.70	0.13	83	Good	Yellow	1	1.902
	R1	Flexible				11.30	5.20	0.12	88	Good	Yellow	1	1.902
	R2	Flexible				10.20	6.70	0.12	90	Good	Yellow	1	1.902
Post Mile: 100.583 to R101.604 Length: 1.021 Estimated Lane Mileage: 1.994	L1	Flexible				7.70	2.60	0.14	111	Fair	Yellow	1	0.997
	L2	Flexible				12.00	5.30	0.18	103	Fair	Yellow	1	0.997
Post Mile: 100.583 to R100.799 Length: 0.216 Estimated Lane Mileage: 0.384	R1	Flexible				8.00	7.50	0.13	118	Fair	Yellow	1	0.192
	R2	Flexible				12.30	8.90	0.16	133	Fair	Yellow	1	0.192
Post Mile: R100.799 to R101.237 Length: 0.438 Estimated Lane Mileage: 0.876	R1	Flexible				11.80	6.10	0.13	122	Fair	Yellow	1	0.438
	R2	Flexible				19.20	10.00	0.19	112	Fair	Yellow	1	0.438
Post Mile: R101.237 to R102.900 Length: 1.663 Estimated Lane Mileage: 3.326	R1	Flexible				4.00	2.80	0.14	108	Fair	Yellow	1	1.663
	R2	Flexible				10.30	4.30	0.20	94	Fair	Yellow	1	1.663
Post Mile: R101.604 to R103.378 Length: 1.774 Estimated Lane Mileage: 3.548	L1	Flexible				3.80	3.10	0.11	109	Fair	Yellow	1	1.774
	L2	Flexible				10.20	3.90	0.22	97	Fair	Yellow	1	1.774
Post Mile: R102.900 to R103.397 Length: 0.497 Estimated Lane Mileage: 0.956	R1	Flexible				3.80	2.70	0.15	104	Fair	Yellow	1	0.478
	R2	Flexible				16.40	4.10	0.18	95	Fair	Yellow	1	0.478
Post Mile: R103.378 to R105.140 Length: 1.762 Estimated Lane Mileage: 3.486	L1	Flexible				4.60	3.50	0.12	99	Fair	Yellow	1	1.743
	L2	Flexible				12.90	4.20	0.22	102	Fair	Yellow	1	1.743
Post Mile: R103.397 to R105.140 Length: 1.743 Estimated Lane Mileage: 3.486	R1	Flexible				4.20	2.60	0.16	89	Good	Yellow	1	1.743
	R2	Flexible				9.90	3.10	0.18	84	Good	Yellow	1	1.743
Post Mile: R105.140 to R106.285 Length: 1.145 Estimated Lane Mileage: 4.512	L1	Flexible				6.90	3.60	0.13	108	Fair	Yellow	1	1.128
	L2	Flexible				11.00	3.70	0.19	107	Fair	Yellow	1	1.128
	R1	Flexible				9.60	7.60	0.14	110	Fair	Yellow	1	1.128
	R2	Flexible				14.20	8.60	0.20	101	Fair	Yellow	1	1.128
Post Mile: 106.630 to 107.607 Length: 0.977 Estimated Lane Mileage: 1.954	L1	Flexible				15.40	4.00	0.20	104	Fair	Yellow	1	0.977
	L2	Flexible				24.20	3.80	0.22	119	Fair	Yellow	1	0.977
Post Mile: 106.630 to 108.220 Length: 1.590 Estimated Lane Mileage: 3.180	R1	Flexible				16.40	8.30	0.22	117	Fair	Yellow	1	1.590
	R2	Flexible				24.80	9.30	0.18	109	Fair	Yellow	1	1.590
Post Mile: 107.607 to 108.220 Length: 0.613 Estimated Lane Mileage: 1.226	L1	Flexible				17.90	4.60	0.20	96	Fair	Yellow	1	0.613
	L2	Flexible				19.30	4.40	0.17	120	Fair	Yellow	1	0.613
Post Mile: 108.220 to 109.257 Length: 1.037 Estimated Lane Mileage: 3.812	L1	Flexible				9.70	4.50	0.16	99	Fair	Yellow	1	0.953
	L2	Flexible				17.60	7.70	0.21	121	Fair	Yellow	1	0.953
	R1	Flexible				11.80	7.30	0.17	104	Fair	Yellow	1	0.953
	R2	Flexible				19.70	9.50	0.18	113	Fair	Yellow	1	0.953
Post Mile: 109.257 to 109.494 Length: 0.237 Estimated Lane Mileage: 0.948	L1	Flexible				7.00	3.70	0.10	97	Fair	Yellow	1	0.237
	L2	Flexible				11.70	9.20	0.18	104	Fair	Yellow	1	0.237
	R1	Flexible				7.90	5.70	0.14	84	Good	Yellow	1	0.237
	R2	Flexible				16.10	19.50	0.11	100	Fair	Orange	1	0.237
Post Mile: 109.494 to 109.600 Length: 0.106 Estimated Lane Mileage: 0.211	L1	Flexible				24.20	24.80	0.19	208	Fair	Orange	1	0.105
	R1	Flexible				20.50	13.60	0.17	150	Fair	Orange	1	0.106
						12.19	**6.86**	**0.15**	**98**				**76.919**
			Lane Weighted Average										Total

PaveM Scenario Used: #2671
APCS Data Year: 2016
Using: Prior-Treatment Distresses

Caltrans Pavement Program
Pavement Condition Detailed Report (PaveM)

District: 1; County: Humboldt (HUM); Route: 101

From PM: R90.100 To PM: 109.600

Year: 2021 (Predicted)

R-Length: 19.423. L-Length: 19.423

R-Lane Miles: 38.156. L-Lane Miles: 38.763 (Unknown lane miles: 0.000)

Pavement Segment	Lane	Type	Concrete			Asphalt			IRI in/mi	MAP-21 Condition	Traditional Condition	Road Class	Estimated Lane Miles
			1st%	3rd%	Fault%	Alligator		Rut (in)					
						A%	B%						
Post Mile: R90.134 to R90.569 Length: 0.435 Estimated Lane Mileage: 0.870	L1	Flexible				6.50	3.20	0.09	96	Fair	Yellow	1	0.435
	L2	Flexible				15.20	5.30	0.13	97	Fair	Yellow	1	0.435
Post Mile: R90.100 to R90.134 Length: 0.034 Estimated Lane Mileage: 0.114	L1	Flexible				6.50	3.20	0.16	139	Fair	Yellow	1	0.029
	L2	Flexible				9.80	4.60	0.14	147	Fair	Yellow	1	0.029
	R1	Flexible				4.80	4.20	0.18	134	Fair	Yellow	1	0.028
	R2	Flexible				9.70	5.20	0.17	134	Fair	Yellow	1	0.028
Post Mile: R90.134 to R91.990 Length: 1.856 Estimated Lane Mileage: 3.712	R1	Flexible				12.40	11.40	0.16	98	Fair	Orange	1	1.856
	R2	Flexible				25.60	9.30	0.18	99	Fair	Yellow	1	1.856
Post Mile: R90.569 to R91.990 Length: 1.421 Estimated Lane Mileage: 2.842	L1	Flexible				6.60	4.60	0.11	89	Good	Yellow	1	1.421
	L2	Flexible				17.30	7.90	0.16	92	Good	Yellow	1	1.421
Post Mile: R91.990 to R93.873 Length: 1.883 Estimated Lane Mileage: 3.724	L1	Flexible				5.10	4.70	0.10	79	Good	Yellow	1	1.862
	L2	Flexible				17.30	11.90	0.18	92	Fair	Orange	1	1.862
Post Mile: R91.990 to R93.852 Length: 1.862 Estimated Lane Mileage: 3.724	R1	Flexible				13.90	12.60	0.15	106	Fair	Orange	1	1.862
	R2	Flexible				26.60	11.80	0.19	100	Fair	Orange	1	1.862
Post Mile: R93.873 to R94.479 Length: 0.606 Estimated Lane Mileage: 1.818	L1	Flexible				9.30	8.20	0.08	113	Fair	Yellow	1	0.606
	L2	Flexible				12.80	9.90	0.13	81	Fair	Yellow	1	0.606
	L3	Flexible				17.90	13.30	0.18	90	Fair	Orange	1	0.606
Post Mile: R93.852 to R94.480 Length: 0.628 Estimated Lane Mileage: 1.214	R1	Flexible				12.10	16.00	0.13	114	Fair	Orange	1	0.607
	R2	Flexible				18.50	13.70	0.15	98	Fair	Orange	1	0.607
Post Mile: R94.479 to R95.459 Length: 0.980 Estimated Lane Mileage: 1.960	L1	Flexible				10.40	15.30	0.11	86	Fair	Orange	1	0.980
	L2	Flexible				14.00	15.20	0.19	94	Fair	Orange	1	0.980
Post Mile: R94.480 to R95.620 Length: 1.140 Estimated Lane Mileage: 2.280	R1	Flexible				12.20	13.70	0.12	124	Fair	Orange	1	1.140
	R2	Flexible				21.30	9.20	0.15	104	Fair	Yellow	1	1.140
Post Mile: R95.459 to R95.620 Length: 0.161 Estimated Lane Mileage: 0.322	L1	Flexible				6.70	6.60	0.09	104	Fair	Yellow	1	0.161
	L2	Flexible				15.60	21.30	0.19	112	Fair	Orange	1	0.161
Post Mile: R95.620 to R96.770 Length: 1.150 Estimated Lane Mileage: 4.512	L1	Flexible				10.20	8.00	0.10	79	Good	Yellow	1	1.128
	L2	Flexible				19.90	10.90	0.18	96	Fair	Orange	1	1.128
	R1	Flexible				12.60	12.20	0.10	104	Fair	Orange	1	1.128
	R2	Flexible				20.70	13.60	0.15	101	Fair	Orange	1	1.128
Post Mile: R96.770 to R97.020 Length: 0.250 Estimated Lane Mileage: 1.000	L1	Flexible				14.10	28.90	0.10	91	Fair	Orange	1	0.250
	L2	Flexible				14.00	21.70	0.13	94	Fair	Orange	1	0.250
	R1	Flexible				11.70	10.20	0.11	90	Fair	Orange	1	0.250
	R2	Flexible				20.50	10.50	0.15	106	Fair	Orange	1	0.250
Post Mile: R97.020 to R97.457 Length: 0.437 Estimated Lane Mileage: 1.748	L1	Flexible				9.70	14.40	0.09	90	Fair	Orange	1	0.437
	L2	Flexible				19.80	22.10	0.16	106	Fair	Orange	1	0.437
	R1	Flexible				8.80	6.30	0.12	91	Good	Yellow	1	0.437
	R2	Flexible				16.90	12.10	0.12	108	Fair	Orange	1	0.437
Post Mile: R97.457 to 98.092 Length: 0.903 Estimated Lane Mileage: 1.608	L1	Flexible				12.70	8.00	0.14	119	Fair	Yellow	1	0.804
	L2	Flexible				14.20	9.30	0.10	115	Fair	Yellow	1	0.804

Post Mile: R97.457 to R97.747 Length: 0.290 Estimated Lane Mileage: 0.432	R1	Flexible				5.20	5.30	0.10	94	Good	Yellow	1	0.216
	R2	Flexible				8.20	7.80	0.11	97	Fair	Yellow	1	0.216
Post Mile: 97.479 to 98.092 Length: 0.613 Estimated Lane Mileage: 1.176	R1	Flexible				9.40	7.50	0.09	114	Fair	Yellow	1	0.588
	R2	Flexible				15.80	8.30	0.11	110	Fair	Yellow	1	0.588
Post Mile: 98.092 to 98.681 Length: 0.589 Estimated Lane Mileage: 2.356	L1	Flexible				16.90	7.50	0.14	103	Fair	Yellow	1	0.589
	L2	Flexible				20.80	8.30	0.14	119	Fair	Yellow	1	0.589
	R1	Flexible				13.20	7.50	0.09	113	Fair	Yellow	1	0.589
	R2	Flexible				16.40	10.80	0.12	116	Fair	Orange	1	0.589
Post Mile: 98.681 to 100.583 Length: 1.902 Estimated Lane Mileage: 7.608	L1	Flexible				12.30	7.50	0.12	96	Fair	Yellow	1	1.902
	L2	Flexible				17.60	8.30	0.13	88	Good	Yellow	1	1.902
	R1	Flexible				14.40	7.50	0.12	92	Good	Yellow	1	1.902
	R2	Flexible				13.50	9.40	0.12	96	Fair	Yellow	1	1.902
Post Mile: 100.583 to R101.604 Length: 1.021 Estimated Lane Mileage: 1.994	L1	Flexible				9.30	3.70	0.14	114	Fair	Yellow	1	0.997
	L2	Flexible				14.40	7.00	0.18	108	Fair	Yellow	1	0.997
Post Mile: 100.583 to R100.799 Length: 0.216 Estimated Lane Mileage: 0.384	R1	Flexible				10.80	10.00	0.13	122	Fair	Orange	1	0.192
	R2	Flexible				15.50	11.90	0.16	139	Fair	Orange	1	0.192
Post Mile: R100.799 to R101.237 Length: 0.438 Estimated Lane Mileage: 0.876	R1	Flexible				14.50	8.40	0.13	126	Fair	Yellow	1	0.438
	R2	Flexible				22.40	12.80	0.19	117	Fair	Orange	1	0.438
Post Mile: R101.237 to R102.900 Length: 1.663 Estimated Lane Mileage: 3.326	R1	Flexible				5.40	3.80	0.14	112	Fair	Yellow	1	1.663
	R2	Flexible				12.60	5.90	0.20	99	Fair	Yellow	1	1.663
Post Mile: R101.604 to R103.378 Length: 1.774 Estimated Lane Mileage: 3.548	L1	Flexible				5.20	4.10	0.11	112	Fair	Yellow	1	1.774
	L2	Flexible				12.60	5.40	0.22	102	Fair	Yellow	1	1.774
Post Mile: R102.900 to R103.397 Length: 0.497 Estimated Lane Mileage: 0.956	R1	Flexible				5.00	3.80	0.15	108	Fair	Yellow	1	0.478
	R2	Flexible				19.10	5.60	0.18	101	Fair	Yellow	1	0.478
Post Mile: R103.378 to R105.140 Length: 1.762 Estimated Lane Mileage: 3.486	L1	Flexible				6.00	4.60	0.12	102	Fair	Yellow	1	1.743
	L2	Flexible				14.70	5.40	0.22	105	Fair	Yellow	1	1.743
Post Mile: R103.397 to R105.140 Length: 1.743 Estimated Lane Mileage: 3.486	R1	Flexible				5.60	3.60	0.16	93	Good	Yellow	1	1.743
	R2	Flexible				11.70	4.10	0.18	87	Good	Yellow	1	1.743
Post Mile: R105.140 to R106.285 Length: 1.145 Estimated Lane Mileage: 4.512	L1	Flexible				8.40	4.80	0.13	111	Fair	Yellow	1	1.128
	L2	Flexible				12.80	4.80	0.19	110	Fair	Yellow	1	1.128
	R1	Flexible				12.10	10.00	0.14	114	Fair	Yellow	1	1.128
	R2	Flexible				16.80	11.10	0.20	105	Fair	Orange	1	1.128
Post Mile: 106.630 to 107.607 Length: 0.977 Estimated Lane Mileage: 1.954	L1	Flexible				17.40	5.10	0.20	108	Fair	Yellow	1	0.977
	L2	Flexible				26.20	5.00	0.22	122	Fair	Yellow	1	0.977
Post Mile: 106.630 to 108.220 Length: 1.590 Estimated Lane Mileage: 3.180	R1	Flexible				19.10	10.70	0.22	121	Fair	Orange	1	1.590
	R2	Flexible				27.50	11.80	0.18	113	Fair	Orange	1	1.590
Post Mile: 107.607 to 108.220 Length: 0.613 Estimated Lane Mileage: 1.226	L1	Flexible				19.90	5.80	0.20	99	Fair	Yellow	1	0.613
	L2	Flexible				21.20	5.60	0.17	124	Fair	Yellow	1	0.613
Post Mile: 108.220 to 109.257 Length: 1.037 Estimated Lane Mileage: 3.812	L1	Flexible				11.40	5.70	0.16	102	Fair	Yellow	1	0.953
	L2	Flexible				19.30	9.20	0.21	124	Fair	Yellow	1	0.953
	R1	Flexible				14.50	9.60	0.17	108	Fair	Yellow	1	0.953
	R2	Flexible				22.40	12.00	0.18	117	Fair	Orange	1	0.953
Post Mile: 109.257 to 109.494 Length: 0.237 Estimated Lane Mileage: 0.948	L1	Flexible				8.50	4.90	0.10	101	Fair	Yellow	1	0.237
	L2	Flexible				13.30	10.70	0.18	107	Fair	Orange	1	0.237
	R1	Flexible				10.30	7.90	0.14	88	Good	Yellow	1	0.237
	R2	Flexible				18.30	22.50	0.11	104	Fair	Orange	1	0.237
Post Mile: 109.494 to 109.600 Length: 0.106 Estimated Lane Mileage: 0.211	L1	Flexible				26.20	28.30	0.19	214	Fair	Orange	1	0.105
	R1	Flexible				23.40	16.70	0.17	156	Fair	Orange	1	0.106
						14.35	**8.65**	**0.15**	**103**				**76.919**
			Lane Weighted Average										Total

Attachment H
MATERIALS RECOMMENDATION

This Page Intentionally Left Blank

State of California
DEPARTMENT OF TRANSPORTATION

California State Transportation Agency

Memorandum

Making Conservation
a California Way of Life.

To: Joe Ostdiek, Design Engineer
Dokken Engineering

Date: February 25, 2019

File: 01-HUM-101-PM R90.10/109.60
EA: 01-0F8200
EFIS: 0116000067
Trinidad CAPM

Attn: Jennifer Langford
Assistant Engineer
Dokken Engineering

From: Abnish Rajbanshi, PE
Materials Engineering
North Region, Eureka Materials Lab

Subject: **Updated Materials Recommendation**

In response to a request for an updated materials recommendation dated January 9, 2019, the following information is provided. The Department's Document Retrieval System (DRS), and Materials Laboratory's project history files were reviewed for previous work within this project's limits to determine the composition of the existing structural section and pavement surface. The pavement Condition Report (2016) from the Department's PaveM database, and the Department's PathWeb (2018) database were used to determine the existing pavement surface condition and the appropriate Capital Preventive Maintenance (CAPM) strategy. No field reviews were conducted during this phase of the project. The overlay thickness recommended in this report is based on Section 634.2 Capital Preventive Maintenance (CAPM) of the Highway Design Manual and CAPM guidelines outlined in Design Information Bulletin 81-1 (DIB 81-01).

Existing Structural Section Thickness

The Materials Laboratory's Structural Section History Files and "as-built" project files of the existing roadway were reviewed to determine the existing structural section and surface treatment through project's limits.

REGISTERED PROFESSIONAL ENGINEER
ABNISH RAJBANSHI
C 87600
EXP. 09/30/19
CIVIL
STATE OF CALIFORNIA

Additionally, a review of the Department's database of ground penetrating radar (iGPR) indicates the north bound number 2 lane structural section consists of 0.55 feet to 0.75 feet of hot mix asphalt on top of 0.6 feet to 0.95 feet of cement treated base all over 0.55 feet to 1.40 feet of aggregate base. The existing pavement surface varies within the project limits with different surface types and thicknesses placed in multiple projects from 1999 to 2016. These projects are listed in following table.

Table 1. Existing Pavement Surface

Project EA	Year	From PM	To PM	Surface
01-378404	2000	87.8	97.4	0.08' OGAC over 0.15' HMA-B
01-490504	2011	97.5	100.7	0.06' BWC-OG
01-398404	2002	100.7	106.1	0.08' OGAC over 0.15' HMA-A
01-350804	1999	106.1	108.8	0.08' OGAC over 0.15' HMA-B
01-398404	2002	108.8	109.6	0.08' OGAC over 0.30' HMA-A
01-0G5204	2016	90.22 & 106.70	92.99 & 108.26	Micro-surfacing (Type III)

The Department's PaveM database provides the predicted 2021 construction year pavement condition, based on the most current Pavement Condition Report (2016). The predicted International Roughness Index (IRI) of the pavements within the project's limits varies from 79 inches per mile to 214 inches per mile with a lane weighted average IRI of 103 inches per mile. The pavement condition at different section lengths are expected to be in fair to good condition with presence of surface distresses; alligator cracking type A varying from 4.80% to 27.50%, with an average of 14.35%; alligator cracking type B varying from 3.20% to 28.90%, with an average of 8.65%; and surface rutting varying from 0.08 in to 0.22 in, with an average of 0.15 in.

Pavement Smoothness

According to the Memorandum subjected "***Providing Pavement Profile Smoothness Data***", signed by Steve Takigawa and Karla Sutliff, dated August 12, 2016 the District will provide bidders the existing pavement profile smoothness data taken within six months of the project's ready to list (RTL) milestone. Please request an inertial profiling to determine the updated IRI of the existing pavement surface at least six months prior to the RTL date.

With the implementation of the new smoothness non-standard special provisions (NSSP), starting February 14, 2019, a pay adjustment has been introduced in the smoothness specification to incentivize/disincentivize based on the final smoothness of pavement surface. This change in

smoothness specification has eliminated the need to estimate the pre-paving grinding days that District had to provide in the past. Please refer "***Section 39 NSSP Asphalt Concrete***", for the new pavement smoothness specification.

Repairs Prior to Overlay

A review of the Department's PathWeb (2018) database shows the existing surface within the project's limits to be in reasonable condition to receive an overlay. A considerable portion of the roadway surface will not require removal prior to an overlay. However, in areas of open graded surface with severe delamination, raveling or other deterioration, cold plane to depth of 0.10' to prepare for overlay. Existing pavement may be milled or cold planed down to the depth of the overlay to maintain the vertical clearance at overcrossings within the project limits. Prior to overlay, a thorough field inspection shall be performed to locate and mark areas that need repairs such as; rutting greater than 1/2" and/or loose spalling pavement. Wherever digout work is required, digout and repair the localized failed areas to a depth of 0.33' (mill and fill HMA type A) and seal all cracks wider than 1/4" by rout and seal method. See Attachment "A" for crack repair detail.

Overlay Existing (CAPM Strategy)

After completion of any necessary repairs, and correction of smoothness through profile grinding, overlay the surface from edge of pavement to edge of pavement with 0.15 feet of rubberized hot mix asphalt, gap graded (RHMA-G) for Route 101, and entrance and exit ramps. According to the CAPM guideline outlined in DIB 81-01, and Section 634.2 Capital Preventive Maintenance (CAPM) of Highway Design Manual for an asphalt pavement with an IRI less than 170 inch/mile this 0.15' of single lift overlay should alleviate bumps and roughness and improve ride quality to an IRI of 75 inches /mile or less. For vista points and park and ride facilities, after repairs, overlay with 0.15' of hot mix asphalt type A (HMA-A). Due to shallow thickness of asphalt layer in these areas (0.17' to 0.25'), do not cold plan entirely, but only do conform grinding to match existing curbs prior to overlay.

Notes:

- Rubberized Hot Mix Asphalt shall be produced using Warm Mix technology or additives, in accordance with section 39-2.01B(8)(c) of 2018 Standard Specifications. Using Warm Mix will improve asphalt compactive efforts and contribute to longer life pavements. Additionally, reductions in Green House Gas (GHG) emissions achieved using Warm Mix asphalts will be in concert with the goals expressed in California Global Warming Solutions Act (AB32) signed in September 2006.

- All rubberized Hot Mix Asphalt shall be placed using Material Transfer Vehicle (MTV), as specified in section 39-2.01C(2)(b) of 2018 Standard Specifications. Using an MTV has proven effective in delivering a more homogeneous asphalt product by remixing the aggregates and redistribution the latent heat in the asphalt matrix.

- Shoulder backing, and pavement edge treatments shall be provided for new overlays. Please refer to Figure 672.3A, and Figure 672.3B of Highway Design Manual for shoulder backing details, and revised standard plan P75 of 2018 Standard Plans for the pavement edge treatments for overlays. Also refer to Pavement Tech Notes-Shoulder Backing (September 30, 2006) for more shoulder backing guidelines.

Material Specifications

- Rubberized Hot Mix Asphalt Gap Graded (RHMA-G): Shall conform to section 39 of 2018 Standard Specifications. The estimated unit weight of RHMA-G is 155 lbs/ft^3

- Hot Mix Asphalt Type A (HMA-A): Shall conform to Section 39 of the 2018 Standard Specifications. The estimated unit weight of HMA-A is 155 lbs/ft^3.

- Asphalt Binder: Shall be PG 64-16 for both RHMA-G and HMA-A. The estimated percentage of asphalt binder per total weight of mix is 7.7% for RHMA-G and 5.6% for HMA-A.

- Paint Binder (Tack Coat): Shall conform to Section 39 of the 2018 Standard Specifications.

- Asphalt Concrete Dykes: Shall conform to Section 39-2.01B(11) of 2018 Standard Specifications.

- Shoulder Backing: Shall conform to the requirements within the Standard Special Provisions for shoulder backing with District 1. The minimum loose unit weight per CTM 212, compacted method (by rodding) shall be 105 lbs/ft^3.

If you have any questions regarding this report, please call Abnish Rajbanshi at (707)-445-6386

Attachments:

A. Cracks Rout and Seal Detail

AR: ar

cc: Joe Ostdiek (orig.)
Jennifer Langford (ec)
Jennifer Buck (ec)
Andre Guimaraes (ec)
Lab Files

Attachment A
Cracks Rout and Seal Detail

01-HUM-101-PM R90.10/109.60
01-0F8200

W = WIDTH OF ROUTING = WIDTH OF CRACK + 1/4" MIN.

D = DEPTH OF ROUTING = W + 1/4" MIN.

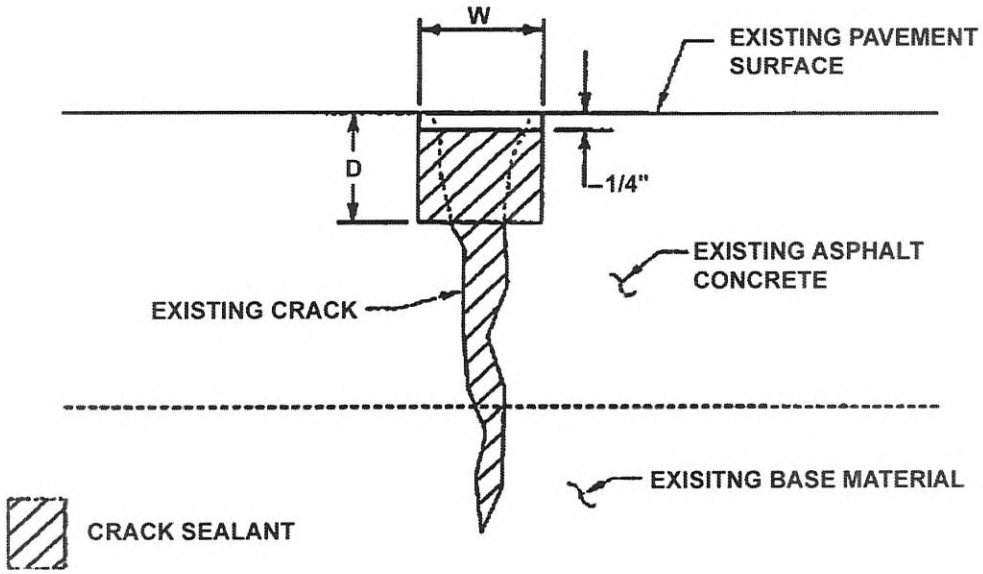

NOTES:
1. ALL CRACKS 1/4" WIDE OR GREATER ARE TO BE ROUTED AND SEALED.
2. IF ANY PART OF ANY CRACK IS 1/4" OR WIDER, THEN THE ENTIRE CRACK WILL BE ROUTED AND SEALED.
3. NO SEALANT MATERIAL WILL BE ALLOWED ON AC PAVEMENT SURFACE.

SEAL RANDOM CRACKS

TYPICAL CROSS SECTION

Attachment I

RIGHT OF WAY DATA SHEET

This Page Intentionally Left Blank

State of California - Department of Transportation

DATASHEET DISTRIBUTION LIST

EA: 0F8200
PROJECT NO.: 01 1600 0067
LOCATION: 01-HUM-101-90.10/109.60
ALTERNATE: 1 of 1
DATE: March 29, 2019

Documents Included

Parcel Worksheet
Mitigation Worksheet
Mitigation & Permit Estimate
Utility Information Sheet
Railroad Information Sheet
USA Lands Information Sheet
Real Property Services Information Sheet
Resource Hour Request
Cover Letter
Right of Way Datasheet

Send Original to:			
N/A Design Engineer			X
Attention: **JOE OSTDIEK (DOKKEN)** Project Engineer			X

Send Copies to:			
LORIEN SANCHEZ Right of Way Engineering			X
JEN BUCK Project Manager		X	X
REBECCA LAW Assistant Project Manager		X	X
JOHN BALLANTYNE North Region Right of Way Division Chief	X	X	X
KAREN E. HAWKINS Assistant Chief, Eureka/Redding RW Office	X	X	X
JEREMIAH JOYNER RW Project Delivery, Eureka RW Office	X	X	X
SAM GENTLE RW Project Coordination	X	X	X
ANGELA JORGENSEN Planning & Management	X	X	X
MATT SIMMONS Estimator	X	X	X
TAUNI MELVIN Utilities	X	X	X
TAUNI MELVIN Railroads			
MATT SIMMONS Mitigation			
SHALISA GENTLE Real Property Services			
CHRIS MARSHALL USA Lands			

Order of Documents

1. Datasheet Distribution List
2. Resource Hour Request
3. Cover Letter
4. Right of Way Datasheet
5. Utility Information Sheet
6. Railroad Information Sheet
7. Mitigation & Permit Estimate
8. Mitigation Worksheet
9. Parcel Worksheets
10. Real Property Services Information Sheet (If Applicable)
11. USA Lands Infromation Sheet (If Applicable)

State of California
Department of Transportation

CALIFORNIA STATE TRANSPORTATION AGENCY

MEMORANDUM

Making Conservation
A California Way of Life.

To: N/A
Design Engineer
Department of Transportation

Attention: JOE OSTDIEK (DOKKEN)
Project Engineer

Date: March 29, 2019

File: 01-HUM-101-90.10/109.60
EFIS No.: 01 1600 0067
EA: 0F8200
Alternate: 1 of 1

From: JEREMIAH JOYNER
Senior Right of Way Agent
Project Delivery
Eureka

Subject: CURRENT ESTIMATED RIGHT OF WAY COSTS

Project Description: IN HUMBOLDT COUNTY IN AND NEAR TRINIDAD FROM 1.3 MILES SOUTH OF SCHOOL ROAD OC TO 0.4 MILE NORTH OF BIG LAGOON BRIDGE

Alternate Description: Trinidad CAPM

We have completed an estimate of the right of way costs for the above referenced project based on information received from you on January 22, 2019 .

Right of Way Lead Time will require a minimum of 12 months after receipt of appraisal maps, utility conflict maps, environmental clearances (HMDD) and Certificate of Sufficiency (COS). A minimum of 12 months prior to certification will be required from receipt of the last map revision. Shorter lead times may require additional support resources and may adversely affect delivery of Right of Way Certification.

JEREMIAH JOYNER
Senior Right of Way Agent
Project Delivery Branch
EUREKA

Attachments:
Right of Way Data Sheet

cc. Jen Buck

State of California - Department of Transportation

RIGHT OF WAY DATASHEET

EA: 0F8200
PROJECT NO.: 01 1600 0067
LOCATION: 01-HUM-101-90.10/109.60
Description: CAPM IN HUMBOLDT COUNTY IN AND NEAR TRINIDAD FROM 1.3 MILES SOUTH OF SCHOOL ROAD OC TO 0.4 MILE NORTH OF BIG LAGOON BRIDGE

ALTERNATE: 1 of 1
DATE: 3/29/2019
Datasheet Type: Annual Update

1. Right of Way Cost Estimate:

	Current Value Future Use	Escalation Rate	Escalated Value
A. Total Acquisition Cost	$0		$0
B. Appraisal Fees Estimate	$0	N/A	$0
C. Mitigation Acquisition & Credits	$0		$0
D. Project Development Permit Fees	$0		$0
Subtotal	$0		N/A
E. Utility Relocation (State's Share)	$10,000	5%	$10,810
(Owner's Share: $100,000)			
F. Relocation Assistance (RAP)	$0		$0
G. Clearance/Demolition	$0		$0
H. Title & Escrow	$0		$0
I. Total Estimated Right of Way Cost	$10,000	**Rounded**	**$10,800** *
J. Construction Contract Work	$0		

2. Current Date of Right of Way Certification

November 1, 2020

3. Parcel Data:

Type		Dual/Appr
X	0	
A	0	
B	0	
C	0	0
D	0	0
RR	0	
Total	**0**	
Excess	0	

Utilities	
U4 - 1	1
- 2	0
- 3	0
- 4	0
U5 - 7	8
- 8	0
- 9	1

Railroad	
C&M Agreement	0
Service Contract	0
Easements	0
Rights of Entry	0
Clauses	0

Areas:	
R/W	N/A
TCE	N/A
Excess	N/A
Mitigation	N/A

Mitigation	
Impacts	0
Parcels	0
Credits	0

Misc. R/W Work	
RAP Displacees	N/A
Clear/Demo	N/A
Permit to Enters	N/A
Condemnation	N/A
USA Involvement	No

4. **Provide a general description of the right of way and excess lands required (zoning, use, major improvements, critical or sensitive parcels, etc.).**

All work will be performed within the existing RW.

5. **Are any properties acquired for this project expected to be rented, leased, or sold?**

Yes _____ No ___X___

6. **Are RAP displacements required?**

Yes _____ No ___X___

No. of single family ___N/A___ No. of business/nonprofit ___N/A___

No. of multi-family ___N/A___ No. of farms ___N/A___

Based on Draft/Final Relocation Impact Statement/Study dated N/A

___N/A___ Sufficient replacement housing will be available without last resort housing.

___N/A___ Sufficient replacement housing will not be available without last resort housing.

7. **Is there an effect on assessed valuation?**

Yes _____ No ___X___ Not Significant _____

8. **Are there any items of Construction Contract Work?**

Yes _____ No ___X___

There is no Construction Contract Work associated with the project.

9. **Are utility facilities or rights of way affected?**

Yes _____ No ___X___

Names of Utility Companies requiring verification only.

McKinleyville CSD - water/sewer (underground), City of Arcata - water/sewer (underground), AT&T - communication (aerial/underground), PG&E - gas (underground), Suddenlink Communications - communication (underground), City of Trinidad - water (underground), Westhaven CSD - water (undergound), Frontier Communications - communication

Names of Utility Companies requiring involvements.

PG&E - electric (aerial/underground)

Additional information concerning Utility Involvement on this project.

Underground PG&E electric may be in conflict at Big Lagoon Bridge. Potholing may be required. As additional information becomes available, this estimate may need to be revised.

10. Are railroad facilities or rights of way affected?

Yes _____ No ___X___ Phase 4 Capital ___$0___

11. Are USA Lands or Rights Affected?

Yes _____ No ___X___ Phase 4 Capital ___$0___

Agencies Involved:

US Forest Service _____ BLM _____ Army Corps of Engineers _____

National Parks _____ BIA _____ Vetrans Administration _____

US Fish & Wildlife _____ GSA _____ _____

Rights or Permissions to acquire:

Easement _____ Special Use Permit _____ Courtesy Letter _____

Right of Way Grant _____ Cooperative Work Agreement _____ Cost Recovery _____

Mineral Agreement _____ Letter of Concurrence _____ Timber Sale _____

_____

12. Is an RE Office required for the project?

Yes ___X___ No _____

Type of RE Office

Modular ___X___ Move In _____

13. Were any previously unidentified sites with hazardous waste and/or material found?

Yes _____ None Evident ___X___

14. Are there material borrow and/or disposal sites required?

No ___X___ Optional _____ Mandatory _____

15. Are there potential relinquishments and/or abandonments?

Yes _____ No ___X___

16. Are there any existing and/or potential airspace sites?

Yes _____ No ___X___

17. What type of mitigation is required for the project?

Mitigation is not anticipated.

18. Is it anticipated that Caltrans will perform all Right of Way work?

Yes _____ No _____

19. Indicate the anticipated Right of Way schedule and lead time requirements.

Right of Way Lead Time will require a minimum of **12** months after we receive first appraisal maps, utility conflict maps, necessary environmental clearances and freeway agreements have been approved and obtained. Additionally a minimum of **12** months will be required after receiving the last appraisal map to Right of Way for certification.

20. Assumptions and limiting Conditions: (Check boxes that apply.)

- ☐ Mapping did not provide sufficient detail to determine the limits of the right of way required.
- ☐ Transportation facilities have not been sufficiently designed to determine the damages to any of the remainder parcels affected by the project.
- ☐ Additional right of way requirements are anticipated, but are not defined due to the preliminary nature of the early design requirements.
- ☐ Design will secure necessary encroachment permits from local agencies.
- ☐ Project permits are not required for the project.
- ☐ Utility lead time begins after PA&ED is met and Utility Conflict Maps have been received.
- ☐ Right of way lead time request does not include time to get an order of possesion on parcels that go to condemnation. Right of way lead time only includes time to get a Resolution of Necessity from the CTC.
- ☑ Per RWDS request, no tree removal is required prior to M495 Contract Award
- ☐
- ☐

Evaluation Prepared By:

Right of Way _____ Date 3/29/19
MATT SIMMONS

Reviewed By

RW Project Coordinator _____ Date 3-29-19
SAM GENTLE

I have personally reviewed this Right of Way Data Sheet and all supporting information. I certify that the probable Highest and Best Use, estimated values, escalation rates and assumptions are reasonable and proper, subject to the limiting conditions set forth, and I find this Data Sheet to be complete and current.

_____
JEREMIAH JOYNER
Senior Right of Way Agent
Project Delivery Branch
Eureka

4-2-19
Date

Attachment J

TRANSPORTATION MANAGEMENT PLAN

This Page Intentionally Left Blank

State of California
DEPARTMENT OF TRANSPORTATION

California State Transportation Agency

TRANSPORTATION MANAGEMENT PLAN UPDATE

To: JOE OSTDIEK
Project Engineer
Dokken Engineering

Date: February 28, 2019
File: HUM-101 PM R90.1/109.6
EA: 01-0F8200
EFIS: 01 1600 0067 0
Trinidad CAPM

As signed by:
From: SHERI RODRIGUEZ, Chief
District 1 Office of Traffic Operations

Project Information

Location:	In Humboldt County, in and near Trinidad, from 1.3 miles south of School Road OC to 0.4 miles north of Big Lagoon Bridge.	
Type of Work:	RHMA-G overlay. Additional work includes digouts, cold planning, shoulder backing, sign replacement, upgrade MBGR to MGS, upgrade vehicle classification stations, and remove/replace asphalt dike.	
Anticipated Traffic Control:	Reversing traffic control on local roads Lane reduction traffic control on US 101 Moving lane closure for striping Shoulder closure Ramp closure	
Estimated Maximum Delay:	5 minutes during reversing control 10 minutes during ramp detours	
Peak Hour Traffic Volumes:	Varies	
Lane Requirement Charts:	Included	
Closure During Night Hours:	Required	
Number of Working Days:	220 days	
PA&ED Date:	August 1, 2019	
RTL Date:	November 1, 2020	
District Traffic Mgr/ TMP Mgr:	Sheri Rodriguez	(707) 445-6377
TMP Contact:	Paul Hailey	(707) 445-5213

Anticipated Traffic Impacts

Significant traffic impacts are not anticipated provided the following recommendations and requirements are incorporated into the project. In conformance with Deputy Directive-60, District Lane Closure Review Committee approval is not required for projects with anticipated traffic delay less than 30 min.

Hours of Work

- See Chart nos. 1-7 for work hour restrictions.
- The full width of the traveled way must be open for use by public traffic for the following Special Days:

Event	Event Date	Special Days
Humboldt State University Graduation	Second Weekend in May	Friday through Sunday

The contractor must verify the actual dates for this Special Event. See Chart no. 8 "Lane Closure Restrictions for Designated Holidays and Special Days" for work day restrictions.

Public Notice

- Upon receipt of notice that the total roadway width, including paved shoulder, will be narrowed to less than 16 ft or there is a change in vertical clearance, the Resident Engineer must promptly notify the HQ District 1 Construction Liaison at (916) 322-4822 so annual permit holders can be notified of restrictions.
- The District Public Information Office, (707) 445-6444, must be contacted two weeks in advance of the start of construction.
- Each closure must be entered in the Lane Closure System (LCS; http://lcs.dot.ca.gov/lcsprod/).
    - To access the LCS you will need an account. Contact Jeannette Candalot at (707) 445-7807 to get set up with an account.
    - Every Monday by noon, submit a schedule of planned closures for the next week period. The next week period is defined as Friday midnight through the following Friday midnight.
    - Closures must be statused daily. Status closures before the first advance warning sign is placed (1097) and after the last advance warning sign is

picked up (1098) or if cancelled (1022). Statusing can be accomplished through:

Status With	Day	Time	URL/Contact Number
LCS Web Page	Any	Any	https://lcs.dot.ca.gov
LCS Mobile Web Page	Any	Any	https://lcsmobile.dot.ca.gov
District 1 Dispatch	Monday-Friday	6:30am-6:30pm	(707) 441-5747
District 3 Dispatch	Monday-Friday	6:30pm-6:30am	(916) 859-7900
District 3 Dispatch	Saturday and Sunday	Any	(916) 859-7900

- Any emergency service agency whose ability to respond to incidents will be affected by any lane closure must be notified prior to that closure.

- Work must be coordinated with the local busing system to minimize impact on their bus schedules.

- The Resident Engineer must provide information to residents and businesses before and during project work that may represent a negative impact on commerce and travel surrounding the zone of construction. Funding must be included in supplemental funds for public information (Item 066063 Traffic Management Plan – Public Information; consider $2,000).

Bicyclist Accommodation

- This section of Route 101 is part of the Pacific Coast Bike Route. Bicyclists must be accommodated through the work zone. Signage must be used to alert vehicles of the possible presence of bicyclists.

  - During reversing traffic control using flaggers, bicyclists must be instructed to join the vehicle queue.

  - During lane reduction traffic control, bicyclists must be provided 4 feet of space adjacent to the open traffic lane during the day. At night, a slow flagger must be present to warn vehicles of the presence of a bicyclist.

Traffic Control

- One lane closure is allowed within the project limits. Lane reduction traffic control may be needed to help facilitate reversing traffic control.

- The W11-1 vehicular traffic sign (bicycle symbol) and the W16-1 supplemental plaque (SHARE THE ROAD) must be placed prior to the construction zone.

- Reversing traffic control must be in conformance with the attached traffic handling plan dated December 1, 2018 "Typical Lane Closure with Reversible Control."

  - Advance flaggers are required during daylight hours. Full matrix PCMS boards with the capability of displaying a flagger symbol must be used during hours of darkness when advance flaggers are not present

- Work that requires a lane and/or shoulder closure on a freeway or expressway must be in conformance with the Caltrans Standard Plan T10, "TRAFFIC CONTROL SYSTEM FOR LANE CLOSURE ON FREEWAYS AND EXPRESSWAYS."

- Work that requires a moving lane closure must be in conformance with the following Caltrans Standard Plans:

  - On a 2-lane facility: Caltrans Standard Plan T17, "TRAFFIC CONTROL SYSTEM FOR MOVING LANE CLOSURE ON TWO LANE HIGHWAYS"

  - On a multilane facility: Caltrans Standard Plan T15, "TRAFFIC CONTROL SYSTEM FOR MOVING LANE CLOSURES ON MULTILANE HIGHWAYS."

- Work that requires a ramp closure must be in conformance with the Caltrans Standard Plan T14, "TRAFFIC CONTROL SYSTEM FOR RAMP CLOSURE."

  - Advance warning signs advising the hours of closure must be required 7 days prior to the ramp closure.

  - No two consecutive off or on-ramps in the same direction can be closed at the same time.

  - No two off or on-ramps in the same interchange can be closed at the same time.

  - In the event a ramp is closed, the designer must provide a traffic handling plan.

- A minimum of one PCMS in advance of each end of the construction site must be required to notify the public of the closures related to this project.

  - Start displaying the message on the PCMS 15 minutes before closing the lane.

- The minimum height of the PCMS must be 7 ft.

- Access to businesses, side roads and residences must be maintained at all times. When work or traffic queues extend through an intersection, additional traffic control will be required at the intersection.

  - One-week notice must be given before closure of the Park and Ride.

- COZEEP is recommended for this project based on risk factors associated with this project and the COZEEP Guidelines (CA DOT Construction Manual Section 2-215C). The associated risk factors include: workers exposed to traffic, night construction activities, end of queue management, speed management, and significant truck volumes.

- The following table lists projects that are anticipated to have closures within this project's work limits and must be added to section 5-1.20A of the 2018 Standard Specifications:

Contract No.	Co-Rte-PM	Location	Type of Work	Est. Delay
01-0J5104	HUM-101-87.8/90.1	Near Arcata	Overlay	TBD
01-0G3704	HUM-101-97.0/97.5	Near Westhaven	Fence Repair	Minimal
01-480404	HUM-101-98.4/100.7	Near Trinidad	Interchange	Minimal

Contingency Plan

The contractor must prepare a contingency plan for reopening closures to public traffic. The Contractor must submit the contingency plan for a given operation to the Engineer within one working day of the Engineer's request. Contingencies for unanticipated delays, emergencies, etc. must be coordinated between the RE and the Contractor.

SMR/pwh
CC: 1)SMRodriguez, 2)JCandalot
JShipp
JBuck
JMcGee
Traffic Safety
PIO

Chart no. 1
Freeway Lane Requirements

County: Humboldt	Route/Direction: 101 NB/SB	PM: R90.1/93.5

Closure limits:

From hour to hour	24	1	2	3	4	5	6	7	8	9	10	11	12	13	14	15	16	17	18	19	20	21	22	23	24
Mondays through Thursdays	1	1	1	1	1	1	1													1	1	1	1	1	
Fridays	1	1	1	1	1	1	1													1	1	1	1	1	
Saturdays	1	1	1	1	1	1	1													1	1	1	1	1	
Sundays	1	1	1	1	1	1	1													1	1	1	1	1	

Legend:

1	Provide at least one 12 ft through freeway lane open in direction of travel. The maximum closure length is 3 miles.
2	Provide at least two adjacent through freeway lanes open in direction of travel
	Except during stage construction/the use of a temp. signal system, No lane and/or shoulder closures allowed.

REMARKS: Keep the full width of the traveled way open to traffic when no active construction activities are occurring in the traveled way or within 6 ft of the traveled way.

Chart no. 2
Freeway/Expressway Lane Requirements

County: Humboldt	Route/Direction: 101 NB/SB	PM: R93.5/109.3

Closure limits:

From hour to hour	24	1	2	3	4	5	6	7	8	9	10	11	12	13	14	15	16	17	18	19	20	21	22	23	24
Mondays through Thursdays	1	1	1	1	1	1	1	2	2	2	2	2	2	2	2	2	2	2	2	1	1	1	1	1	
Fridays	1	1	1	1	1	1	1	2	2	2	2	2	2	2	2	2	2	2	2	1	1	1	1	1	
Saturdays	1	1	1	1	1	1	1	2	2	2	2	2	2	2	2	2	2	2	2	1	1	1	1	1	
Sundays	1	1	1	1	1	1	1	2	2	2	2	2	2	2	2	2	2	2	2	1	1	1	1	1	

Legend:

1	Provide at least one 12 ft through freeway/expressway lane open in direction of travel. The maximum closure length is 3 miles.
2	Provide at least one 16 ft through freeway/expressway lane open in direction of travel. The maximum closure length is 1 mile.

REMARKS: Keep the full width of the traveled way open to traffic when no active construction activities are occurring in the traveled way or within 6 ft of the traveled way.

Chart no. 3
Complete Ramp Closure Hours

County: Humboldt	Route/Direction: 101 NB/SB	PM: R90.1/R93.5; 100.5/R101.0

Closure limits: All ramps from Central Ave through Murray Rd and Main Street in Trinidad

From hour to hour	24	1	2	3	4	5	6	7	8	9	10	11	12	13	14	15	16	17	18	19	20	21	22	23	24
Mondays through Thursdays	C	C	C	C	C	C	C													C	C	C	C	C	
Fridays	C	C	C	C	C	C	C																		
Saturdays																									
Sundays																				C	C	C	C	C	

Legend:

C	Ramp may be closed completely
	No ramp closures allowed.

REMARKS:

1. Keep the full width of the ramp traveled way open for use by traffic on designated holidays and special days.
2. A ramp detour plan must be approved prior to the closure of any ramps.

Chart no. 4
Complete Ramp Closure Hours

County: Humboldt	Route/Direction: 101 NB/SB	PM: R93.5/100.5; R101.0/109.6

Closure limits:

From hour to hour	24	1	2	3	4	5	6	7	8	9	10	11	12	13	14	15	16	17	18	19	20	21	22	23	24
Mondays through Thursdays	C	C	C	C	C	C	C	C	C	C	C	C	C	C	C	C	C	C	C	C	C	C	C	C	
Fridays	C	C	C	C	C	C	C	C	C	C	C	C	C	C	C										
Saturdays																									
Sundays																				C	C	C	C	C	

Legend:

C	Ramp may be closed completely
	No ramp closures allowed.

REMARKS:

1. Keep the full width of the ramp traveled way open for use by traffic on designated holidays and special days.
2. A ramp detour plan must be approved prior to the closure of any ramps.

Chart no. 5
Conventional Highway Lane Requirements

County: Humboldt	Route/Direction: 101 NB/SB	PM: 109.3/109.6

Closure limits:

From hour to hour	24	1	2	3	4	5	6	7	8	9	10	11	12	13	14	15	16	17	18	19	20	21	22	23	24
Mondays through Thursdays	R	R	R	R	R	R	R	R	R	R	R	R	R	R	R	R	R	R	R	R	R	R	R	R	R
Fridays	R	R	R	R	R	R	R	R	R	R	R	R	R	R	R	R									
Saturdays																									
Sundays																					R	R	R	R	R

Legend:

R	Provide at least one 12 ft through traffic lane for use by both directions of travel (Reversing Control). The maximum closure length is 3,000 ft.
	No lane and/or shoulder closures allowed.

REMARKS: Keep the full width of the traveled way open to traffic when no active construction activities are occurring in the traveled way or within 6 ft of the traveled way.

Chart no. 6
Local Road Lane Requirements

County: Humboldt	Route/Direction: 101 NB/SB	PM: R90.1/R93.5; 100.5/R101.0

Closure limits: All local roads from Central Ave through Murrary Rd and Main Street in Trinidad

From hour to hour	24	1	2	3	4	5	6	7	8	9	10	11	12	13	14	15	16	17	18	19	20	21	22	23	24
Mondays through Thursdays	R	R	R	R	R	R	R													R	R	R	R	R	
Fridays	R	R	R	R	R	R	R																		
Saturdays																									
Sundays																				R	R	R	R	R	

Legend:

R	Provide at least one 12 ft through traffic lane for use by both directions of travel (Reversing Control). The maximum closure length is 2,000 ft.
	No lane and/or shoulder closures allowed.

REMARKS: Keep the full width of the traveled way open to traffic when no active construction activities are occurring in the traveled way or within 6 ft of the traveled way.

Chart no. 7
Local Road Lane Requirements

County: Humboldt	Route/Direction: 101 NB/SB	PM: R93.5/100.5; R101.0/109.6

Closure limits:

From hour to hour	24	1	2	3	4	5	6	7	8	9	10	11	12	13	14	15	16	17	18	19	20	21	22	23	24
Mondays through Thursdays	R	R	R	R	R	R	R	R	R	R	R	R	R	R	R	R	R	R	R	R	R	R	R	R	R
Fridays	R	R	R	R	R	R	R	R	R	R	R	R	R	R	R	R									
Saturdays																									
Sundays																					R	R	R	R	R

Legend:

R	Provide at least one 12 ft through traffic lane for use by both directions of travel (Reversing Control). The maximum closure length is 2,000 ft.
	No lane and/or shoulder closures allowed.

REMARKS: Keep the full width of the traveled way open to traffic when no active construction activities are occurring in the traveled way or within 6 ft of the traveled way.

Chart no. 8
Lane Closure Restrictions for Designated Holidays and Special Days

Thu	Fri	Sat	Sun	Mon	Tues	Wed	Thu	Fri	Sat	Sun
xx	**H** xx									
	SD xx									
	xx	**H** xx								
		SD xx								
	xx		**H** xx	xx						
			SD xx							
	xx			**H** xx						
				xx	**H** xx					
					xx	**H** xx				
						xx	**H** xx	xx		

Legend:

	Refer to lane requirement charts
xx	The full width of the traveled way must be open for use by traffic.
H	Designated Holiday
SD	Special Day

Dist	COUNTY	ROUTE	POST MILES TOTAL PROJECT	SHEET No.	TOTAL SHEETS
01	x	x	x		

Sheri M. Rodriguez 12-01-18
REGISTERED CIVIL ENGINEER DATE

Month Day, Year
PLANS APPROVAL DATE

THE STATE OF CALIFORNIA OR ITS OFFICERS OR AGENTS SHALL NOT BE RESPONSIBLE FOR THE ACCURACY OR COMPLETENESS OF SCANNED COPIES OF THIS PLAN SHEET.

REGISTERED PROFESSIONAL ENGINEER SHERI M. RODRIGUEZ No. C66861 Exp. 9-30-20 CIVIL STATE OF CALIFORNIA

NOTES:

SEE STANDARD PLAN T9 FOR TABLES.

USE CONE SPACING X FOR TAPER SEGMENT, Y FOR TANGENT SEGMENT OR Z FOR CONFLICT SITUATIONS, AS APPROPRIATE, PER TABLE 1, UNLESS X, Y, OR Z CONE SPACING IS SHOWN ON THIS SHEET.

PROVIDE AT LEAST ONE PERSON TO CONTINUOUSLY MAINTAIN TRAFFIC CONTROL DEVICES FOR LANE CLOSURES.

TYPICAL LANE CLOSURE WITH REVERSIBLE CONTROL

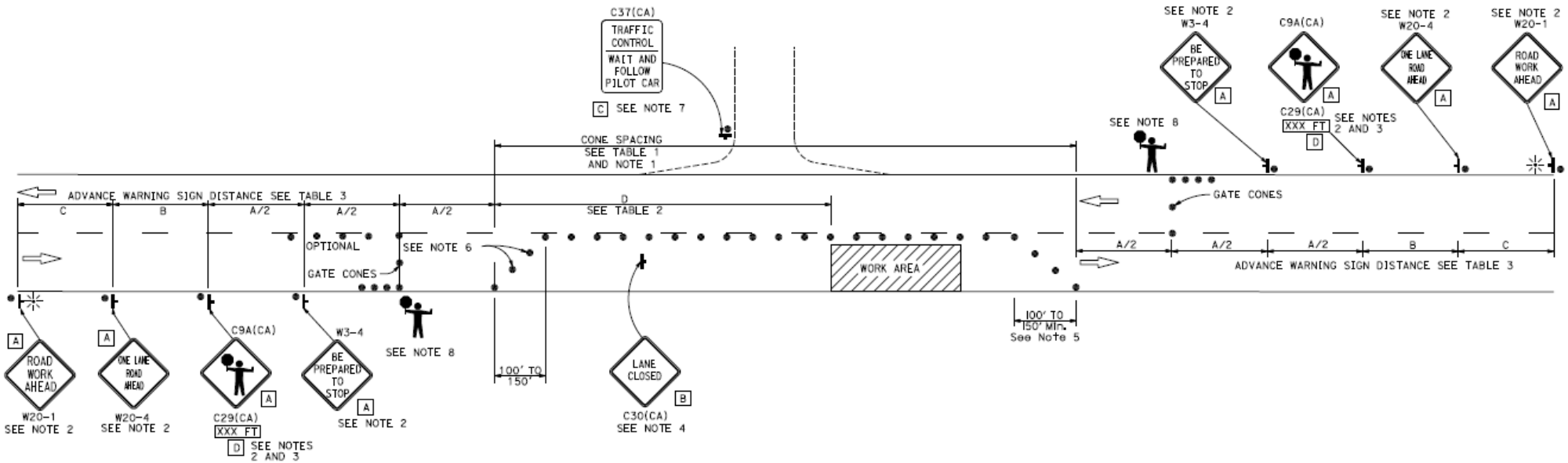

NOTES:

1. PORTABLE DELINEATORS PLACED AT ONE-HALF THE SPACING INDICATED FOR TRAFFIC CONES MAY BE USED INSTEAD OF CONES FOR DAYTIME CLOSURES ONLY.
2. EACH ADVANCE WARNING SIGN SHALL BE EQUIPPED WITH AT LEAST TWO FLAGS FOR DAYTIME CLOSURE. EACH FLAG SHALL BE AT LEAST 16" X 16" IN SIZE AND SHALL BE ORANGE OR FLUORESCENT RED-ORANGE IN COLOR. FLASHING BEACONS SHALL BE PLACED AT THE LOCATIONS INDICATED FOR LANE CLOSURE DURING HOURS OF DARKNESS.
3. AN OPTIONAL C29(CA) SIGN MAY BE PLACED BELOW THE C9A(CA) SIGN.
4. PLACE C30(CA) "LANE CLOSED" SIGN AT 500' TO 1000' INTERVALS THROUGHOUT EXTENDED WORK AREA. THEY ARE OPTIONAL IF THE WORK AREA IS VISIBLE FROM THE FLAGGER STATION.
5. LENGTH MAY BE REDUCED BY THE ENGINEER TO ADDRESS SITE CONDITIONS.
6. EITHER TRAFFIC CONES OR BARRICADES SHALL BE PLACED ON THE TAPER. BARRICADES SHALL BE TYPE I, II, OR III.
7. WHEN A PILOT CAR IS USED, PLACE A C37(CA) "TRAFFIC CONTROL - WAIT AND FOLLOW PILOT CAR" SIGN WITH BLACK LEGEND ON WHITE BACKGROUND AT ALL INTERSECTIONS, DRIVEWAYS AND ALLEYS WITHOUT A FLAGGER WITHIN TRAFFIC CONTROL AREA.
8. ADDITIONAL ADVANCE FLAGGERS MAY BE REQUIRED. DURING HOURS OF DARKNESS A FULL MATRIX PCMS BOARD CAPABLE OF DISPLAYING A FLAGGER SYMBOL SHALL BE USED IF ADVANCE FLAGGERS ARE NOT PRESENT.

SIGN PANEL SIZE (Min)

- A 48" x 48"
- B 30" x 30"
- C 36" x 42"
- D 20" x 7"

LEGEND

- TRAFFIC CONE
- TEMPORARY TRAFFIC CONTROL SIGN
- PORTABLE FLASHING BEACON
- FLAGGER

TRAFFIC HANDLING PLAN
TH-1

NO SCALE

APPROVED FOR TRAFFIC HANDLING WORK ONLY

Attachment K
TRAFFIC CENSUS REVIEW

This Page Intentionally Left Blank

State of California
DEPARTMENT OF TRANSPORTATION

California State Transportation Agency

M e m o r a n d u m

Serious drought.
Help save water!

To: ALEX SIMMONS
Engineer
Advance Planning

Date: January 31, 2017

From: DANIEL MILICH
Traffic Census Coordinator
District 1 – Traffic Operations

Re: 01-HUM-101-PM: 90.1-109.6
EA 01-0F820
01 1600 0067
Trinidad CAPM

Subject: **TRAFFIC CENSUS REVIEW**

The Traffic Census program and the data it provides is essential for the Department to efficiently manage the State's transportation system. Accurate traffic census data is critical to the Department's decision-making processes such as performing safety analysis, meeting design standards, prioritizing projects and long-range planning. It also allows us to share the demands on our transportation system with our partners and stakeholders.

There are two partially functioning continuous Vehicle Classification Stations located within the limits of your project (HUM 101 PM 97.5 and 107.67). Our VCS provide traffic volume as well as vehicle classification data. Please include in your project an upgrade of these 2 stations to fully functional status. We are requesting an upgrade of both stations to 2 vehicle detection loops per lane and 1 piezo detector per lane. The continuous VCS sites as requested would cost approximately $48,000. These stations would provide count data that would satisfy HQ's data collection requirements as well as provide real time data to my office.

If you have any questions, please call me at (707) 445-6308 or (707) 498-1594. Thank you.

Cc: Talitha Hodgson, Advance Planning Branch Chief
Nancy Kuykendall, Project Engineer
Kim Floyd, Project Manager

This Page Intentionally Left Blank

Attachment L
ENVIRONMENTAL DETERMINATION

This Page Intentionally Left Blank

CATEGORICAL EXEMPTION/CATEGORICAL EXCLUSION DETERMINATION FORM

01-HUM-101	90.1/109.6	01-0F820	
Dist.-Co.-Rte. (or Local Agency)	P.M./P.M.	E.A/Project No.	Federal-Aid Project No. (Local Project)/Project No.

PROJECT DESCRIPTION: (Briefly describe project including need, purpose, location, limits, right-of-way requirements, and activities involved in this box. *Use Continuation Sheet, if necessary.)*

This project proposes to replace failing hot mix asphalt (HMA) (0.33' digouts) and apply a 0.15' gap graded rubberized hot mix asphalt (RHMA-G) overlay from edge of pavement (EP) to EP along U.S. Highway 101 (US 101) near Trinidad from 1.3 miles south of School Road to .04 mile north of Big Lagoon Bridge, including entrance and exit ramps, Clam Beach Vista Point, and a park-and-ride facility within the project limits. Cold-planing will occur at conforms and under overcrossings (OC) to maintain vertical clearance, and will be required at locations where the pavement is sufficiently degraded. Shoulder backing, sign replacement, drainage inlets and overside drain upgrades will be included, as required. Metal beam guard railing (MBGR) and end treatments will be upgraded to Midwest Guardrail System (MGS) as necessary. Concrete Barrier Transitions (CBT) and transition railing will be included as required.

CALTRANS CEQA DETERMINATION (Check one)

☐ **Not Applicable – Caltrans is not the CEQA Lead Agency**

☐ **Not Applicable – Caltrans has prepared an Initial Study or Environmental Impact Report under CEQA**

Based on an examination of this proposal, supporting information, and the above statements, the project is:

☐ **Exempt by Statute.** (PRC 21080[b]; 14 CCR 15260 et seq.)

☒ **Categorically Exempt. Class 1.** (PRC 21084; 14 CCR 15300 et seq.)
Based on an examination of this proposal and supporting information, the following statements are true and exceptions do not apply:

- If this project falls within exempt class 3, 4, 5, 6 or 11, it does not impact an environmental resource of hazardous or critical concern where designated, precisely mapped, and officially adopted pursuant to law.
- There will not be a significant cumulative effect by this project and successive projects of the same type in the same place, over time.
- There is not a reasonable possibility that the project will have a significant effect on the environment due to unusual circumstances.
- This project does not damage a scenic resource within an officially designated state scenic highway.
- This project is not located on a site included on any list compiled pursuant to Govt. Code § 65962.5 ("Cortese List").
- This project does not cause a substantial adverse change in the significance of a historical resource.

☐ **Common Sense Exemption.** [This project does not fall within an exempt class, but it can be seen with certainty that there is no possibility that the activity may have a significant effect on the environment (14 CCR 15061[b][3].)

Dana York	Jen Buck
Print Name: Senior Environmental Planner or Environmental Branch Chief	Print Name: Project Manager
Dana York — 7/8/2019	Jen M — 7/8/2019
Signature — Date	Signature — Date

NEPA COMPLIANCE

In accordance with 23 CFR 771.117, and based on an examination of this proposal and supporting information, the State has determined that this project:

- does not individually or cumulatively have a significant impact on the environment as defined by NEPA, and is excluded from the requirements to prepare an Environmental Assessment (EA) or Environmental Impact Statement (EIS), and
- has considered unusual circumstances pursuant to 23 CFR 771.117(b).

CALTRANS NEPA DETERMINATION (Check one)

☒ **23 USC 326:** The State has determined that this project has no significant impacts on the environment as defined by NEPA, and that there are no unusual circumstances as described in 23 CFR 771.117(b). As such, the project is categorically excluded from the requirements to prepare an EA or EIS under the National Environmental Policy Act. The State has been assigned, and hereby certifies that it has carried out the responsibility to make this determination pursuant to Chapter 3 of Title 23, United States Code, Section 326 and a Memorandum of Understanding dated May 31, 2016, executed between the FHWA and the State. The State has determined that the project is a Categorical Exclusion under:

- ☒ **23 CFR 771.117(c): activity (c) (26)**
- ☐ **23 CFR 771.117(d): activity (d) (___)**
- ☐ **Activity ___ listed in Appendix A of the MOU between FHWA and the State**

☐ **23 USC 327:** Based on an examination of this proposal and supporting information, the State has determined that the project is a Categorical Exclusion under 23 USC 327. The environmental review, consultation, and any other actions required by applicable Federal environmental laws for this project are being, or have been, carried out by Caltrans pursuant to 23 USC 327 and the Memorandum of Understanding dated December 23, 2016 and executed by FHWA and Caltrans.

Dana York	Jen Buck
Print Name: Senior Environmental Planner or Environmental Branch Chief	Print Name: Project Manager/DLA Engineer
Dana York — 7/8/2019	Jen M — 7/8/2019
Signature — Date	Signature — Date

Date of Categorical Exclusion Checklist completion: 07/01/2019 | Date of ECR or equivalent: 07/01/2019

Continued from page 1:

Two partially functioning continuous Vehicle Classification Stations (VCS) will be upgraded to fully functional status. Hot Mix Asphalt (HMA) dike will be removed and replaced as required and existing pavement delineation will be replaced. The purpose of this project is to preserve the drivability and serviceability of this section of US 101. This project is needed as the portion of Route 101 contains alligator cracking and surface rutting and is degrading such that Highway Maintenance programs are inadequate to preserve the existing roadway. All work will be conducted within the existing Caltrans right of way.

Project Requirements:

Air, biological, cultural, noise, visual, water quality, and hazardous materials reviews have been completed by qualified specialists and there are no anticipated impacts on these resources with the incorporation of the measures identified below. A Coastal Development permit waiver is expected.

- The Programmatic Letter of Concurrence with U.S. Fish and Wildlife Service, work windows for both Marbled Murrelet (MAMU) and Northern Spotted Owl (NSO) would be implemented for all work north of the Little River Bridge (post mile [PM] 97.50).
  - No noise above 90 decibels Feb 1-August 5.
  - No noise above 100 decibels (20 dB above ambient) August 5-Sept 15 from 2 hours pre-sunset and post-sunrise.
- No pile driving will occur along Big Lagoon (post miles 108.4-109.6).
- Temporary parking of work vehicles and storage of equipment or materials will be on existing pavement, existing gravel areas, and specified areas within the existing Caltrans right of way.
- Any potentially sensitive environmental areas will be designated on construction specifications/plans, and/or protected during construction with High Visibility Temporary Fencing (HVTF).
- Concrete vegetation control under guardrail will be colored.
- Aerially Deposited Lead (ADL), which is commonly found in all highway shoulders, may be at a level that requires special handling of excess material. This will be addressed with Standard Special Provision (SSP) 7-1.02K (6)(j)(iii) EARTH MATERIAL CONTAINING LEAD and a Lead Compliance Plan.
- Treated Wood Waste (TWW) will be generated from guard rail removal. This can be addressed with SSP 14-11.14 TREATED WOOD WASTE management in the construction contract and a TWW disposal contract item.
- Thermoplastic stripe grinding or removal will be addressed with SSP 36-4 CONTAINING LEAD FROM PAINT AND THERMOPLASTIC and a Lead Compliance Plan contract item.

Attachment M
ENVIRONMENTALLY SENSITIVE AREAS

This Page Intentionally Left Blank

Environmentally Sensitive Areas—Trinidad CAPM (PMs Approximate, Use Maps as Reference)

Direction	PM Start	PM End
NB	94.469	94.769
NB	95.370	95.469
NB	95.769	97.069
SB	96.969	97.069
NB	98.897	98.903
NB	99.101	99.201
NB	99.995	100.070
NB	101.201	101.401
NB	102.701	102.901
SB	108.343	108.353
NB and SB	108.463	109.500

- **PMs 94.469-94.769 (NB)**
  Recommendations:
  - No concrete
  - Stay within red boundary
  - Do NOT disturb downslope area

- **PMs 95.370-95.469 (NB)**
  Recommendations:
  - Stay within red boundary (do not go past reflective posts)

- Do NOT disturb downslope area

- **PMs 95.769-97.069 (NB)**
  Recommendations:
  - Only place shoulder backing on existing shoulder backing
  - Do NOT disturb downslope area
  - Do not disturb area behind dike

- **PMs 96.969-97.069 (SB)**

  Recommendations:
  - Do not disturb soil off EP
  - No shoulder backing off existing
  - No concrete at guardrail location
    - Need to review location if guardrail is extended (not recommended)

- **PMs 98.897-98.903 (NB)**

  Recommendations:
  - Do not disturb soil off EP
  - Stay out of wetted channel and bank

- No shoulder backing off existing

- **PMs 99.101-99.201 (NB)**
  Recommendations:
  - No shoulder backing off existing

- **PMs 99.995-100.070 (NB)**
  Recommendations:
  - No shoulder backing off existing
  - Do not disturb area behind dikes
  - No shoulder backing behind dikes

- 

- **PMs 101.201-101.401 (NB)**
  Recommendations:
  - Do not disturb soil off pavement
  - Do not disturb soil behind dike
  - Do not place shoulder backing

- **PMs 102.701-102.901 (NB)**
  Recommendations:
  - Do not disturb soil behind dike
  - Do not place shoulder backing

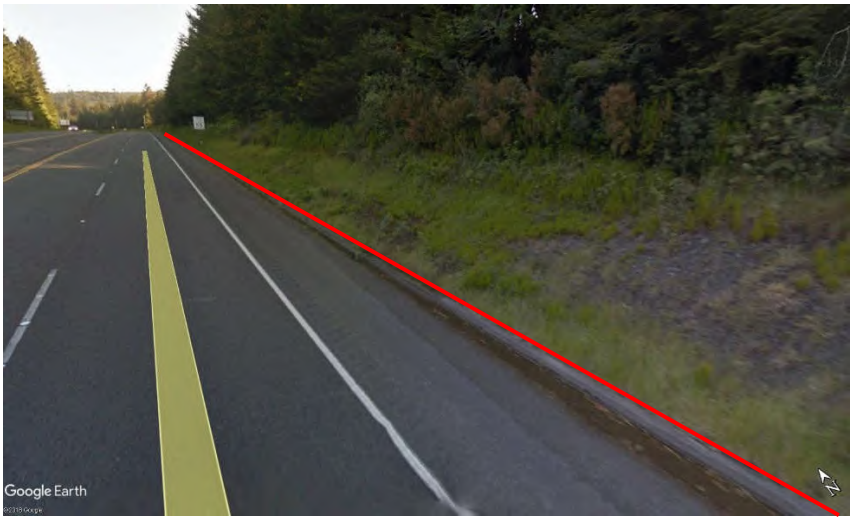

- **PMs 108.343-108.353 (SB)**
  Recommendations:
  - Do not disturb soil off pavement
  - Do not disturb soil behind dike
  - Do not place shoulder backing

- **PMs 108.463-109.500 (Big Lagoon NB/SB)**
  Recommendations:
  - Do not disturb soil off pavement
  - Do not place shoulder backing off existing
  - Vibrate guardrails into place (No impact pile driving in area)
  - Need to review location if guardrail is extended (not recommended)

Attachment N

STORMWATER DATA REPORT DEFERRAL

This Page Intentionally Left Blank

From:	Faubel, Wesley J@DOT
To:	Sadkowski, Sheila E@DOT
Cc:	Kuykendall, Nancy A@DOT
Subject:	RE: Request for SWDR Deferral to PSE: 01-0F820K
Date:	Thursday, March 02, 2017 1:00:00 PM

I agree.

Refer to this email as authority to defer the SWDR to the PSE project phase. Please advise the Design Stormwater Unit if the project scope changes as that may impact the status of the deferral.

Wes Faubel, PE, CPSWQ/CPESC
Storm Water Coordinator
NR Office of Eng Svcs
530 218 3689 (Cell)
530 225 3412

From: Sadkowski, Sheila E@DOT
Sent: Wednesday, March 01, 2017 1:32 PM
To: Faubel, Wesley J@DOT <wesley.faubel@dot.ca.gov>
Cc: Kuykendall, Nancy A@DOT <nancy.Kuykendall@dot.ca.gov>
Subject: Request for SWDR Deferral to PSE: 01-0F820K

Wes,

Based on the information provided this project this project does not meet any of the water quality threshold requirements of the 2012 MS4 Permit and poses no changes to the water quality characteristics of the project area.

Please review and confirm.

Thank you,

Sheila Sadkowski, PE
Design Stormwater Coordinator, D1
1656 Union Street, Room 268
Eureka CA 95501
(707)445-5277

This Page Intentionally Left Blank

Attachment O
DRAINAGE ASSESSMENT

This Page Intentionally Left Blank

State of California
DEPARTMENT OF TRANSPORTATION

Business, Transportation and Housing Agency

Memorandum

Making Conservation. a California Way of Life!

To: JOE OSTDIEK, Project Engineer
Dokken Engineering

Date: April 24, 2019
File: 01-HUM-101-PM 90.1-109.6
01-0F820
01 1600 0067
Trinidad CAPM

From: CELESTE REDNER
North Region Capital Hydraulics
District 1- Eureka

Subject: DRAINAGE ASSESSMENT

At the request of Joe Ostdiek of Dokken on March 5, 2019; North Region Hydraulics staff has completed a second hydraulic review for the project. This project proposes to replace failing HMA (digouts) and apply a 0.15' gap graded rubberized hot mix asphalt (RHMA-G) from edge of pavement to edge of pavement along Route 101, including entrance and exit ramps, a vista point, and a park-and-ride facility within the project limits. Cold-planing will occur at conforms, and may be required at additional locations where the pavement is sufficiently degraded. Metal beam guard railing (MBGR) and end treatments will be upgraded to Midwest Guardrail System (MGS) as necessary. Two partially functioning continuous Vehicle Classisfication Stations (VCS) will be upgraded to fully functional status. HMA dike will be removed and replaced as required and existing pavement delineation will be replaced.

Watershed Characteristics

The proposed project is located on the United States Geological Survey (USGS) Arcata North Quadrangle 40124-H1-TF-024 and on the Crannell Quadrangle 41124-A1-TF-024, see Figure 1.

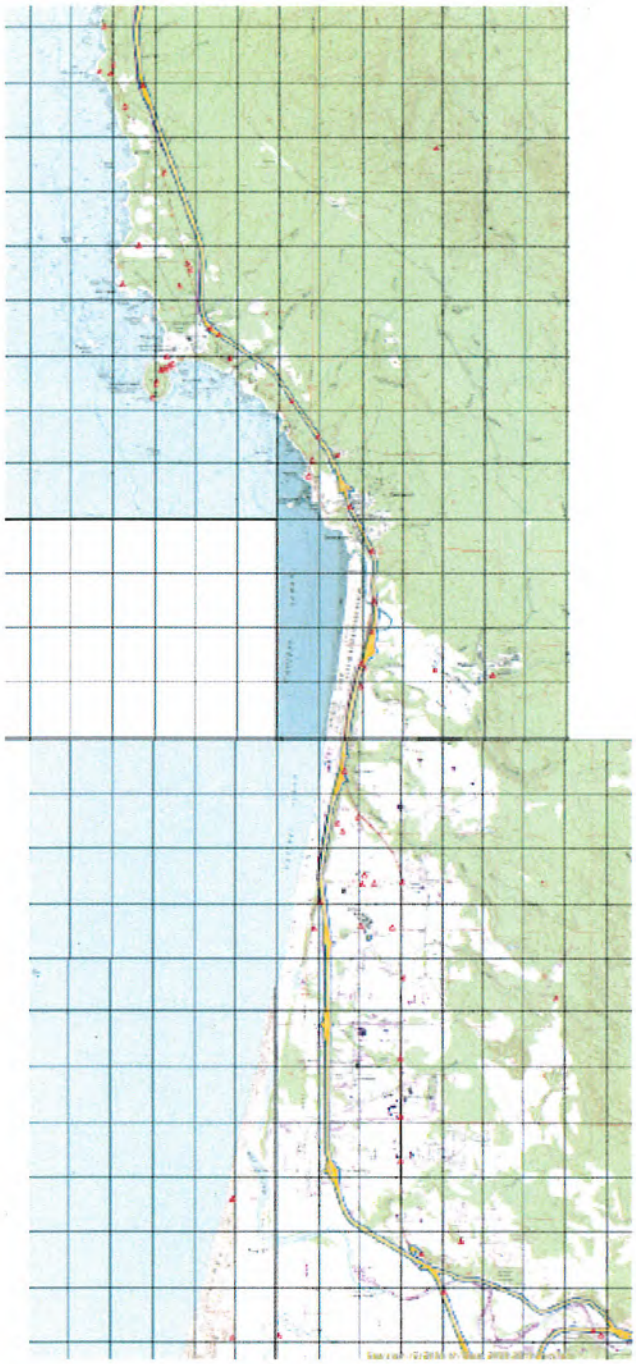

Figure 1. USGS Arcata North and Crannell Quadrangles

Climate

Weather data from the Eureka WFO Woodley Island (042910) monitoring station shows that the project location has a Mean Annual Precipitation of 39.45 inches with an Average Monthly Minimum January Temperature of 41.3 degrees Fahrenheit and an Average Monthly Maximum July temperature of 61.9 degrees Fahrenheit. Rainfall occurs mainly in the winter months and snowfall is not common.

Hydrology

National Oceanic and Atmospheric Administration (NOAA) Atlas 14 intensity, duration, frequency estimates, and the 2 year 24 hour rainfall depth are provided in Table 1 below (http://hdsc.nws.noaa.gov/hdsc/pfds/pfds).

Table 1. Hydrology Summary

Hydrology	
Time of Concentration (Roadway)	5 minutes
Intensity (Inches/Hour)	5 year – 2.66
	10 year – 3.14
	25 year – 3.86
	100 year – 5.11
2 year 24 hour rainfall depth (inches)	3.88

Culvert Summary:

There are about 122 culvert systems within the project limits. Of these culverts four are in need of partial or entire replacement and 20 in need of cleaning or repair according to the Division of Maintenance *Statewide Culverts* data. These locations include but are not necessarily limited to the list provided in Table 2 below.

Table 2. Culvert Repair Strategy Summary

Postmile	Material	Culvert Size (FT)	Maintenance Recommendation
92.18	Concrete	2.5	Flush Sediment/Debris Removal
94.38	Concrete	1.5	Flush Sediment/Concrete Repair
95.47	Concrete	4.5	Flush Sediment/Regrade Channel
97.13	Concrete	1.5	Joint Sealing/Repair/Replace
97.6	Concrete	2	Flush Sediment
97.92	Concrete	1.5	Replace/Flush Sediment
97.95	Concrete	2	Replace a Section
98.01	CSP	1.5	Embankment Stabilization
98.16	CSP	1.5	Flush Sediment
100.94	Concrete	1.5	Debris Removal
101.45	CSP	2	Flush Sediment
101.71	CSP	5	Invert Repair
101.86	Concrete	1.5	Flush Sediment
101.96	CSP	1.5	Replace a Section/Replacement
102.06	Concrete	1.5	Flush Sediment
102.33	CSP	4.5	Invert Repair
104.57	CSP	3	Invert Repair
104.79	CSP	4	Invert Repair
105.05	CSP	2.5	Invert Repair
105.36	CSP	3.5	Invert Repair
105.49	CSP	2	Invert Repair
106.08	CSP	1.5	Replace/Invert Repair
106.21	CSP	1.5	Flush Sediment
106.92	Concrete	2.5	Invert Repair

Drainage Inlet Summary:

There are 118 drainage inlets within the project limits, information for these drainage inlets was taken directly from the Division of Maintenance *Statewide Culverts* database, including the *Recommended Action*. Some of these inlets are in need of replacement and many are in need of cleaning or repair according to the Division of Maintenance *Statewide Culverts* data. These locations include but are not necessarily limited to the list provided in Table 3 below. Inlets that have a health score of 75 or below are shown in bold.

Table 3. Drainage Inlet Summary

Number	End Treatment Type	Inlet or Outlet	System Begin Postmile	End Treatment Postmile	Health Score	Condition	Recommended Action1	Recommended Action2
1	**DI**	**Both**	**91.290001**	**91.29**	**64**	**Fair**	**Replace Lid/Grate**	**Debris Removal**
2	DI_SO	Inlet	91.809998	91.81	91	Good	Replace Lid/Grate	Do Nothing
3	DI	Both	92.18	92.18	86	Good	Do Nothing	Do Nothing
4	**DI**	**Both**	**93.059998**	**93.06**	**68**	**Fair**	**Do Nothing**	**Do Nothing**
5	DI	Inlet	93.059998	93.06	86	Good	Do Nothing	Do Nothing
6	**DI**	**Both**	**93.059998**	**93.01**	**68**	**Fair**	**Flush Sediment**	**Debris Removal**
7	DI	Both	93.059998	92.94	100	Good	Do Nothing	Do Nothing
8	DI	Inlet	93.059998	92.94	100	Good	Do Nothing	Do Nothing
9	DI	Both	93.059998	93.06	91	Good	Do Nothing	Do Nothing
10	DI	Inlet	93.059998	93.05	94	Good	Do Nothing	Do Nothing
11	DI	Both	93.059998	93.06	89	Good	Do Nothing	Do Nothing
12	DI	Both	93.699997	93.70	91	Good	Do Nothing	Do Nothing
14	DI	Inlet	93.790001	93.79	94	Good	Do Nothing	Do Nothing
15	**DI**	**Both**	**94.379997**	**94.38**	**72**	**Fair**	**Do Nothing**	**Do Nothing**
16	**DI_SO**	**Inlet**	**94.379997**	**94.38**	**71**	**Fair**	**Replace Lid/Grate**	**Do Nothing**
17	**DI**	**Both**	**95.580002**	**95.58**	**68**	**Fair**	**Debris Removal**	**Flush Sediment**
18	**DI**	**Inlet**	**95.580002**	**95.59**	**68**	**Fair**	**Debris Removal**	**Flush Sediment**
19	DI	Both	96.050003	95.99	100	Good	Do Nothing	Do Nothing
20	DI	Inlet	96.900002	96.90	94	Good	Do Nothing	Do Nothing
21	**DI_SO**	**Both**	**96.900002**	**96.90**	**41**	**Poor**	**Flush Sediment**	**Replace Lid/Grate**
22	**DI**	**Both**	**97.129997**	**97.13**	**71**	**Fair**	**Do Nothing**	**Do Nothing**
23	DI	Both	97.129997	97.13	94	Good	Do Nothing	Do Nothing
24	DI	Inlet	97.129997	97.13	91	Good	Do Nothing	Do Nothing

25	**DI_SO**	**Outlet**	**97.129997**	**97.13**	**41**	**Poor**	**Flush Sediment**	**Replace Lid/Grate**
28	DI_SO	Both	97.919998	97.92	94	Good	Do Nothing	Do Nothing
29	**DI_SO**	**Inlet**	**97.949997**	**97.95**	**48**	**Poor**	**Joint Sealing/Repair**	**Joint Sealing/Repair**
30	DI	Inlet	98.010002	98.01	91	Good	Do Nothing	Do Nothing
31	**OD**		**98.010002**	**98.01**	**32**	**Poor**	**Embankment Stabilization**	**Hydrology/Hydraulics Investigation**
32	**DI**	**Inlet**	**98.160004**	**98.10**	**29**	**Poor**	**Flush Sediment**	**Debris Removal**
33	DI	Both	100.7	100.71	97	Good	Do Nothing	Do Nothing
34	DI	Inlet	100.7	100.72	97	Good	Do Nothing	Do Nothing
35	DI	Both	100.7	100.71	97	Good	Do Nothing	Do Nothing
36	DI	Inlet	100.7	100.72	97	Good	Do Nothing	Do Nothing
37	**DI**	**Both**	**100.7**	**100.72**	**46**	**Poor**	**Replace Lid/Grate**	**Embankment Stabilization**
38	DI	Both	100.7	100.74	77	Fair	Vegetation Removal	Do Nothing
39	**DI_SO**	**Both**	**100.7**	**100.70**	**70**	**Fair**	**Debris Removal**	**Replace Lid/Grate**
40	DI_SO	Both	100.7	100.70	94	Good	Do Nothing	Do Nothing
41	DI_SO	Both	100.7	100.71	100	Good	Do Nothing	Do Nothing
42	**DI_SO**	**Inlet**	**100.7**	**100.71**	**70**	**Fair**	**Replace Lid/Grate**	**Debris Removal**
43	DI	Both	100.71	100.73	97	Good	Do Nothing	Do Nothing
44	**DI**	**Inlet**	**100.71**	**100.73**	**73**	**Fair**	**Debris Removal**	**Do Nothing**
45	DI	Both	100.71	100.72	100	Good	Do Nothing	Do Nothing
46	DI	Both	100.94	100.90	86	Good	Concrete Repair	Concrete Repair
47	DI	Both	100.94	100.89	86	Good	Do Nothing	Do Nothing
48	DI	Inlet	100.94	100.88	89	Good	Do Nothing	Do Nothing

49	DI	Both	100.94	100.94	87	Good	Regrade Channel	Regrade Channel
50	DI	Both	100.94	100.90	87	Good	Do Nothing	Do Nothing
51	DI	Both	100.94	100.94	87	Good	Do Nothing	Do Nothing
52	DI	Both	100.94	100.94	87	Good	Do Nothing	Do Nothing
53	DI	Both	101.14	101.14	91	Good	Do Nothing	Do Nothing
54	DI	Both	101.14	101.14	94	Good	Do Nothing	Do Nothing
55	DI	Both	101.45	101.45	94	Good	Do Nothing	Do Nothing
56	DI	Both	101.45	101.45	94	Good	Do Nothing	Do Nothing
57	DI	Both	101.55	101.55	91	Good	Do Nothing	Do Nothing
58	DI	Both	101.55	101.55	86	Good	Do Nothing	Do Nothing
59	**DI**	**Both**	**101.86**	**101.86**	**71**	**Fair**	**Debris Removal**	**Debris Removal**
60	**DI**	**Both**	**101.96**	**101.96**	**73**	**Fair**	**Do Nothing**	**Do Nothing**
61	**DI**	**Both**	**101.96**	**101.96**	**73**	**Fair**	**Do Nothing**	**Do Nothing**
62	DI	Both	102.06	102.06	94	Good	Do Nothing	Do Nothing
63	DI	Both	102.06	102.06	94	Good	Do Nothing	Do Nothing
64	DI	Inlet	102.06	102.14	91	Good	Do Nothing	Do Nothing
65	DI	Both	102.06	102.14	91	Good	Do Nothing	Do Nothing
66	DI	Inlet	102.06	102.20	94	Good	Do Nothing	Do Nothing
67	DI	Both	102.06	102.20	91	Good	Do Nothing	Do Nothing
68	DI_SO	Inlet	102.06	102.14	91	Good	Do Nothing	Do Nothing
69	**DI**	**Both**	**102.33**	**102.32**	**73**	**Fair**	**Do Nothing**	**Do Nothing**
70	DI	Inlet	102.33	102.32	94	Good	Do Nothing	Do Nothing
71	DI	Both	102.98	102.98	91	Good	Do Nothing	Do Nothing
72	DI	Both	102.98	102.98	91	Good	Do Nothing	Do Nothing
73	DI	Inlet	103.39	103.40	91	Good	Do Nothing	Do Nothing
74	**DI**	**Inlet**	**103.39**	**103.38**	**71**	**Fair**	**Do Nothing**	**Do Nothing**

75	**DI**	**Inlet**	**103.39**	**103.38**	**71**	**Fair**	**Do Nothing**	**Do Nothing**
76	DI	Both	103.39	103.39	91	Good	Do Nothing	Do Nothing
77	DI	Both	103.39	103.38	91	Good	Do Nothing	Do Nothing
78	DI	Both	103.39	103.39	91	Good	Do Nothing	Do Nothing
79	DI	Both	103.39	103.39	91	Good	Do Nothing	Do Nothing
80	**DI**	**Both**	**103.39**	**103.38**	**71**	**Fair**	**Do Nothing**	**Do Nothing**
81	**DI**	**Both**	**103.39**	**103.38**	**71**	**Fair**	**Do Nothing**	**Do Nothing**
82	**DI**	**Both**	**103.39**	**103.37**	**73**	**Fair**	**Do Nothing**	**Do Nothing**
83	**DI**	**Both**	**103.39**	**103.47**	**71**	**Fair**	**Do Nothing**	**Do Nothing**
84	**DI**	**Both**	**104.16**	**104.16**	**73**	**Fair**	**Do Nothing**	**Do Nothing**
85	**DI**	**Inlet**	**104.27**	**104.27**	**71**	**Fair**	**Do Nothing**	**Do Nothing**
86	**DI**	**Both**	**104.38**	**104.38**	**73**	**Fair**	**Do Nothing**	**Do Nothing**
87	DI	Inlet	104.39	104.39	91	Good	Do Nothing	Do Nothing
88	**DI**	**Both**	**104.5**	**104.50**	**73**	**Fair**	**Do Nothing**	**Do Nothing**
89	**DI**	**Both**	**104.57**	**104.57**	**73**	**Fair**	**Do Nothing**	**Do Nothing**
90	**DI**	**Both**	**104.79**	**104.75**	**73**	**Fair**	**Do Nothing**	**Do Nothing**
91	**DI**	**Both**	**104.79**	**104.75**	**73**	**Fair**	**Do Nothing**	**Do Nothing**
92	**DI**	**Both**	**104.79**	**104.75**	**73**	**Fair**	**Do Nothing**	**Do Nothing**
93	**DI**	**Inlet**	**105.05**	**104.90**	**73**	**Fair**	**Do Nothing**	**Do Nothing**
94	**DI**	**Both**	**105.05**	**104.97**	**71**	**Fair**	**Do Nothing**	**Do Nothing**
95	DI	Both	105.05	105.05	100	Good	Do Nothing	Do Nothing
96	**DI**	**Both**	**105.05**	**105.05**	**68**	**Fair**	**Do Nothing**	**Do Nothing**
97	DI	Both	105.28	105.28	91	Good	Do Nothing	Do Nothing
98	DI	Both	105.28	105.28	91	Good	Do Nothing	Do Nothing
99	DI	Both	105.28	105.28	91	Good	Do Nothing	Do Nothing
100	DI	Inlet	105.28	105.27	91	Good	Do Nothing	Do Nothing
101	DI	Inlet	105.55	105.55	Not Evaluated	Not Evaluated		
102	DI	Inlet	105.55	105.55	Not Evaluated	Not Evaluated		
103	DI	Inlet	105.55	105.55	Not Evaluated	Not Evaluated		
104	DI	Both	106.08	106.07	91	Good	Do Nothing	Do Nothing

105	DI	Both	106.08	106.08	91	Good	Do Nothing	Do Nothing
106	DI	Both	106.08	106.08	100	Good	Do Nothing	Do Nothing
107	DI	Both	106.08	106.07	91	Good	Do Nothing	Do Nothing
108	**DI**	**Both**	**106.08**	**106.08**	**73**	**Fair**	**Do Nothing**	**Do Nothing**
109	DI	Both	106.08	106.08	94	Good	Do Nothing	Do Nothing
110	DI	Both	106.08	106.07	91	Good	Do Nothing	Do Nothing
111	DI	Both	106.08	106.06	91	Good	Do Nothing	Do Nothing
112	DI	Inlet	106.08	106.06	94	Good	Do Nothing	Do Nothing
113	DI	Inlet	106.08	105.95	94	Good	Do Nothing	Do Nothing
114	DI	Both	106.21	106.20	Not Evaluated	Not Evaluated		
115	DI	Inlet	106.21	106.20	Not Evaluated	Not Evaluated		
116	DI	Inlet	106.21	106.18	Not Evaluated	Not Evaluated		
117	DI_SO	Both	107.19	107.19	Not Evaluated	Not Evaluated		
118	DI_SO	Inlet	107.19	107.19	Not Evaluated	Not Evaluated		

Roadway Drainage:

Ensure flow-paths to existing drainage inlets and overside drains are perpetuated in areas of proposed paving. Any existing dikes and overside drains that are affected by the paving must be replaced or re-constructed. There are locations where existing drainage inlets may need to be raised to grade, have grinding completed around the inlet, or replaced if pavement elevations change.

During the March 29, 2019 field review, an inspection was completed of existing overside drains, several are recommended to be replaced. They are located at the following locations:

PM 95.00

There are two overside drains located near PM 95.00. The first, just south of PM 95.00 is rusted and there is scouring at the outlet. The overside drain should be replaced and small rock placed at the outlet to repair the scouring, see Figure 2.

Figure 2. Overside drain located just south of PM 95.00

The next overside drain is located just north of PM 95.00. There is sloughing of the fill slope at this location. This system should be replaced and the fill slope repaired.

Figure 3. Overside drain located just north of PM 95.00

PM 100 (approx.)

The overside drain located at approximately PM 100 should either be replaced in-kind or replaced with a short paved ditch, see Figure 4.

Figure 4. Overside drain located at approx. PM 100.00

PM 104.16

This location has an existing paved overside channel that outlets over a cross culvert located at PM 104.16. The flared end section is rusted and in poor condition and should be replaced, see Figures 5 and 6.

Figure 5. Paved overside drain located at PM 104.16

Figure 6. Flared End Section located at PM 104.16

Paved Ditches

There are paved ditches within the project limits, northbound and southbound, where hydraulic capacity should be analyzed.

Costs should be included in the estimate for grinding around drainage inlets

If you have questions or concerns, please contact our office at (707) 441-2037.

cc: 1 Jennifer Langford, Dokken Engineering
2. Jen Buck, Project Manager
3. Project files

CMR/cmr

Attachment P

LANDSCAPE ARCHITECURE
ASSESSMENT STUDY

This Page Intentionally Left Blank

Landscape Architecture Assessment Study (LAAS)

Project Information

Project Nickname: Trinidad CAPM

Phase: ☐ K-PID ☒ 0-PA/ED

EA: 01-0F820

EFIS: 01 1600 0067

LAAS Version: ☒ Original ☐ LAAS Update No.

Dist-County-Route: 01-HUM-101

Post Mile (PM) Limits: R90.1 / 109.6

Funding Program: ☒ SHOPP ☐ STIP ☐ LOCAL ☐ OTHER:

Project Cost Total ($K): 40,574

Roadway ($K): 40,574 Structures ($K): Right of Way ($K):

Separate Highway Planting Contract:

☒ Roadside work as part of roadway project EA

☐ Roadside work for roadway project under separate EA

Deliver Milestones:

M010 Approve PID: 6/27/17	M300 PS&E-District: 04/01/20	M380 Proj. PS&E: 11/01/20
M200 PA&ED: 08/01/19	M377 PS&E-DOE: 07/01/20	M460 RTL: 11-15-20

I have reviewed the Landscape Architecture Assessment Study and found it to be complete, current, and accurate:

Approved by	*Jen Buck, Project Manager*	5/7/2019 *Date*
Checked by	*Laura Lazzarotto, Landscape Architect*	5/6/19 *Date*
Prepared by	*Jessica Bailey, Landscape Associate*	5/6/19 *Date*

GENERAL INFORMATION

- The Landscape Architecture Assessment Study (LAAS) defines the role of the Landscape Architecture unit in every project, identifies project costs related to landscape architectural elements, and establishes Landscape Architecture unit resource needs. Visit LA Role for information about the role of Landscape Architects at Caltrans.
- The LAAS is prepared at K-Phase (PID) and 0-Phase (PA&ED) to analyze proposed project alternatives and record the unit's required involvement in a project. Analysis should include applying the guidance outlined in Chapter 3, Section 12, and Chapter 29 (all sections) of the Project Development Procedures Manual (PDPM), the appropriate sections of the Highway Design Manual (HDM), and the Landscape Architecture Program website.
- During K-Phase, the LAAS should attempt to capture as many needed landscape architectural elements as possible to establish baseline project costs and resources for the unit.
- During 0-Phase, the LAAS should refine the needed elements, costs, and resources, as appropriate. More information on the project should be available during PA&ED to build on the LAAS from K-Phase (if one was prepared).
- The LAAS must include the following for each project alternative, as appropriate:
    1. Identification of required Landscape Architectural elements.
    2. Cost estimates for Landscape Architectural elements
    3. Landscape Architecture Resources Required (as an attachment, see below).
- Our unit is responsible for estimating costs for items under Chapters 20 and 21 of the 2018 Standard Specifications. However, there may be items included in the LAAS that will require a cost estimate from the Project Engineer (PE), which will be included in the Project Cost Estimate section of the project reports.

Project Description

This project proposes to replace failing hot mix asphalt (HMA) (digouts) and apply a 0.15' gap graded rubberized hot mix asphalt (RHMA-G) overlay from edge of pavement (EP) to EP along Route 101, including entrance and exit ramps, a vista point, and a park-and-ride facility within the project limits. Cold-planing will occur at conforms and may be required at additional locations where the pavement is sufficiently degraded. Shoulder backing, sign replacement and drainage culverts and inlets will be included, as required. Metal beam guard railing (MBGR) and end treatments will be upgraded to Midwest Guardrail System (MGS} as necessary. Concrete Barrier Transitions will be included as required. Two partially functioning continuous Vehicle Classification Stations (VCS) will be upgraded to fully functional status. HMA dike will be removed and replaced as required and existing pavement delineation will be replaced.

Purpose:
The purpose of this project is to preserve the drivability and serviceability of this section of Route 101.

Need:
This portion of Route 101 contains alligator cracking and surface rutting and is degrading such that Highway Maintenance programs are inadequate to preserve the existing roadway.

Recommendations

Standard Permanent Erosion Control measures for disturbed soil areas (DSA).

It is anticipated that DSA will be limited. The information provided shows all work related to the guardrail and overlay work will be within the roadway or will receive shoulder backing and no permanent erosion control is needed. Areas of anticipated DSA that will require permanent erosion control are for drainage work and concrete barrier transitions.

If the scope of work changes an updated LAAS will be required.

Environmental and Visual Setting

Scenic Highway Status			
☐ Officially Designated ☒ Eligible ☐ Not Designated			
Eligible starting at PM 91.3	**YES**	**NO**	**TBD**
Classified Landscaped Freeway Status: *PM 92.89 / 93.11*	X		
Visual or scenic resources within project limits:			
VIA prepared for this project: *PENDING Jessica Bailey*			X
Visual impact mitigation required*: None if standard measures are used such adding colorant to concrete vegetation control and minimization of vegetation removal*		X	
Community and Local Involvement:			
Public displays required - *None anticipated at this time*		X	
Aesthetic Treatment (architectural design, texture/pattern, color)		X	
Bridge structure (barriers, abutments, wing walls, girders)		X	
Paving (beyond the gore/narrow areas/side slopes)		X	
Retaining/sound wall		X	
Noise barrier		X	
Median barrier		x	
Guardrail barrier (rail color/texture, mat color)	x		
Sidewalk		X	
Roundabout		X	
RSP		X	
Other		X	
National Wild and Scenic Rivers Status:		X	
Oak woodlands:		X	
Livability features:		X	
Complete Streets: *Per the Final PIR consider ADA improvements at the Vista Point at PM 94.3*	X		

Erosion Control and Stormwater Design

	YES	NO	TBD
Soil Disturbance: *Drainage repair and conc. Barrier transition work*			
Cut/Fill Slopes		X	
Side Slopes		X	
Slopes > 2:1		X	
☐ 1.5:1 ☐ 1:1			
Disturbed Soil Area (acres)		.11	
Notice of Termination (NOT) Risk Level: ***TBD - SWDR deferred to next phase***			
☐ WPCP ☐ RL1 ☐ RL2 ☐ RL3			
Strategy for NOT			
☒ 70% Vegetative Cover ☐ Permanent EC Establishment Work			
☐ Construction Staff Consultation ☐ RUSLE			
Stormwater BMPs			
Treatment BMPs (DPPIA, biofiltration strips/swales, detention devices)			x
Requires EC treatment			x
Design Pollution Prevention (DPP BMPs)			x
Concentrated Flow Systems			x
Requires EC treatment			x
Slope/Surface Protection Systems (RSP, slope paving, rock blanket)			x
AREA TOTALS		**Acres**	
EROSION CONTROL		.11	
RSP/SLOPE PAVING		-	

Highway Planting, Irrigation, and Mitigation

	YES	NO	TBD
Highway Planting			
Replacement Highway Planting:		X	
Highway Planting Revegetation:		X	
Roadside Rehabilitation (SHOPP only):		X	
New Highway Planting (SHOPP only):		X	
Highway Planting Area Subtotal (acres):			
Required Mitigation Planting			
Highway Planting Required for Mitigation Purposes:		X	
Biological Revegetation Required (Site Preparation Work):		X	
Environmental Coordinator/Project Biologist Contact Date:			
Permits required:			
Mitigation Area Subtotal (acres):			
Existing Irrigation System:		X	
Modification or replacement needed:		X	
Roadside Protection, Restoration, and Advanced Mitigation		X	
AREA TOTALS		Acres	
Highway Planting:		-	
Required Mitigation Planting:		-	

Roadside Protection, Restoration, and Advanced Mitigation. Roadside protection and restoration serves to enhance, preserve, or restore scenic and native landscape areas within or near roadsides, reduce life-cycle costs, and improve worker safety. See Chapter 29, Section 2, of the PDPM for more information.

Roadside Safety Improvements

	YES	NO	TBD
SAFE ACCESS (access gates, MVP, access roads)		X	
BARRIERS (fencing to minimize unauthorized access)		X	
MISC. PAVING/TREATMENT (treatment under guardrail - Vegetation Control - Minor Concrete)	X		
VEGETATION CONTROL (Vegetation Control - Minor Concrete)	X		
MISC. FACILITIES & EQUIPMENT (relocate irrigation, graffiti prevention)		X	

The goal of the **Roadside Safety Improvements Program** is to reduce roadside worker fatalities to zero by minimizing the frequency and duration of highway worker exposure to traffic.

- Refer to the following:
  - SHOPP – Roadside Safety Improvements spreadsheet
  - Roadside Management Toolbox: Caltrans Roadside Management Toolbox
  - Also see Topics 706 and 902 of the HDM, and Chapter 29, Section 2, of the PDPM.

Cost Estimate

Erosion Control Items									
Item #	**Description**	**Pay Unit**	**qty**	**price**		**total**		**Spec Sec**
210010	MOVE-IN/MOVE-OUT (EROSION CONTROL)	EA	2	$	1,200.00	$	2,400.00	21
210270	ROLLED EROSION CONTROL PRODUCT (NETTING)	SQFT	1000	$	3.00	$	3,000.00	21
210350	FIBER ROLLS	LF	1000	$	10.00	$	10,000.00	21
210300	HYDROMULCH	SQFT	5000	$	0.25	$	1,250.00	21
210430	HYDROSEED	SQFT	5000	$	0.30	$	1,500.00	21
					Total EC Work	**$**	**18,150.00**	

This Page Intentionally Left Blank

Attachment Q
PROGRAMMING SHEET

This Page Intentionally Left Blank

Programming Sheet

AMS ID: 0116000067 EA: 01-0F820 COUNTY: HUM ROUTE: 101 POSTMILE: R90.1/109.6

Project Manager: BUCK, JENNIFER L | PM Assistant: LAW, REBECCA L | Project Nickname: TRINIDAD CAPM

Project Description - Long: IN HUMBOLDT COUNTY IN AND NEAR TRINIDAD FROM 1.3 MILES SOUTH OF SCHOOL ROAD OC TO 0.4 MILE NORTH OF BIG

Work Description - Long: CAPM

PPNO: 2439 | Program: shopp | RPT: No | Funding No | PROGRAM YR: 2021 | Working Days:

Open for Time: Yes | Subprogram: Pavement Rehabilitation | CT Status: APL | RMP: | RMP Date:

10 Yr SHOPP: No | AADD: Yes | Dist SHOPP MAJOR | FED Aid Eligible: YES

MS	MS Description	MS Date	
M000	ID NEED	01/06/2016	(A)
M010	APPROVE PID	06/27/2017	(A)
		09/16/2017	
M020	BEGIN ENVIRO	11/01/2017	(A)
		10/01/2017	
M200	PA&ED	08/01/2019	(T)
		07/09/2019	
M300	CIRC PLANS IN DIST	04/01/2020	(T)
		07/01/2020	(T)
M380	PROJ PS&E	11/01/2020	(T)
		11/01/2020	(T)
M430	DCR	11/01/2020	(T)
		11/15/2020	(T)
M470	FUND ALLOCATION	12/15/2020	(T)
		03/15/2021	(T)
M495	AWARD	05/01/2021	(T)
M500	APPROVE CONTRACT	06/01/2021	(T)
M600	CONTRACT ACCEPT	12/01/2022	(T)
M700	FINAL REPORT	12/01/2023	(T)
M800	END PROJ EXP	12/01/2024	(T)
		09/01/2026	(T)

Capital Cost Estimates ($k)

	Amount $k	EST Date
Roadway	40256	06/27/19
Structures	214	06/27/19
Const Total	40470	
ROW	10	03/29/19
Total	40480	

CE (CEQA), CE (NEPA)

Funding Info ($k)

Fund Source	PA&ED	PS&E	ROW	CON	ROW Cap	CON CAP
2020201.121	0	0	0	0	12	45355
4050201.121	0	0	0	0	0	0
2010201.121	332	561	84	4287	0	0
Grand Total:	**332**	**561**	**84**	**4,287**	**12**	**45,355**

Capital Cost Estimates ($k)

Mid Const Season	2021
CC Escalation %:	4.20%
CC Escalated $:	45,787
ROW CAPITAL:	11
TOTAL:	45,798

PROJECT SUPPORT COSTS ($k)

Phase Esc. Rate	PRIOR ACT $	FY19/20 ETC (4.20%)	FY20/21 (4.20%)	FY21/22 (4.20%)	FY22/23 (4.20%)	FY23/24 (4.20%)	Future (4.20%)	Total	Sup/Cap%
0	**198**	**134**	**0**	**0**	**0**	**0**	**0**	**332**	**0.73%**
1	**0**	**319**	**232**	**0**	**0**	**0**	**0**	**551**	**1.20%**
2	**0**	**5**	**11**	**14**	**15**	**16**	**7**	**68**	**0.15%**
3	**0**	**0**	**207**	**2,716**	**1,322**	**115**	**9**	**4,369**	**9.54%**
							TOTAL SUPPORT COSTS:	5,320	11.62%
							TOTAL PROJECT COSTS:	51,118	

PROJECT SUPPORT PYs

	Division	PRIOR ACT PYS	2019 ETC PYs	2020 ETC PYs	2021 ETC PYs	2022 ETC PYs	2023 ETC PYs	Future ETC PYs	Total ETC PYs
01	ADMN	0.01	0.00	0.00	0.00	0.00	0.00	0.00	0.02
01	MTCE	0.02	0.02	0.00	0.00	0.00	0.00	0.00	0.05
01	PPM	0.25	0.14	0.13	0.05	0.05	0.05	0.02	0.70
01	TPLN	0.34	0.02	0.01	0.00	0.00	0.00	0.00	0.37
01	TROP	0.11	0.17	0.09	0.09	0.04	0.00	0.00	0.51
01	TOTALS :	0.73	0.35	0.23	0.14	0.09	0.05	0.02	1.65
	Division	PRIOR ACT PYS	2019 ETC PYs	2020 ETC PYs	2021 ETC PYs	2022 ETC PYs	2023 ETC PYs	Future ETC PYs	Total ETC PYs
03	CONS	0.10	0.14	1.01	10.97	5.03	0.32	0.01	17.58
03	ENVM	0.25	0.30	0.12	0.05	0.04	0.02	0.00	0.78
03	ESRV	0.11	0.23	0.24	0.02	0.04	0.02	0.00	0.67
03	PRJD	0.14	0.70	0.15	0.02	0.02	0.01	0.00	1.03
03	RWLS	0.09	0.11	0.02	0.04	0.02	0.01	0.00	0.30
03	SURV	0.04	0.17	0.05	0.07	0.06	0.06	0.03	0.48
03	TO34	0.00	0.20	0.00	0.00	0.00	0.00	0.00	0.20
03	TPLN	0.01	0.00	0.00	0.00	0.00	0.00	0.00	0.01
03	TOTALS :	0.74	1.85	1.59	11.17	5.21	0.44	0.04	21.05
	Division	PRIOR ACT PYS	2019 ETC PYs	2020 ETC PYs	2021 ETC PYs	2022 ETC PYs	2023 ETC PYs	Future ETC PYs	Total ETC PYs
59	METS	0.00	0.02	0.07	0.82	0.35	0.00	0.00	1.26
59	PPM	0.03	0.03	0.17	0.00	0.00	0.00	0.00	0.24
59	SCON	0.00	0.01	0.02	0.15	0.06	0.00	0.00	0.25

Programming Sheet

AMS ID: 0116000067 EA: 01-0F820 COUNTY: HUM ROUTE: 101 POSTMILE: R90.1/109.6

	Division	PRIOR ACT PYS	2019 ETC PYs	2020 ETC PYs	2021 ETC PYs	2022 ETC PYs	2023 ETC PYs	Future ETC PYs	Total ETC PYs
59	SP&I	0.00	0.01	0.00	0.00	0.00	0.00	0.00	0.02
59	TOTALS :	0.03	0.07	0.26	0.97	0.41	0.00	0.00	1.77
	Division	PRIOR ACT PYS	2019 ETC PYs	2020 ETC PYs	2021 ETC PYs	2022 ETC PYs	2023 ETC PYs	Future ETC PYs	Total ETC PYs
		0.20	0.00	0.00	0.00	0.00	0.00	0.00	0.20
	TOTALS :	0.20	0.00	0.00	0.00	0.00	0.00	0.00	0.20
PROJECT TOTALS:		1.70	2.27	2.08	12.28	5.71	0.49	0.06	24.67

Comments:

Attachment R
RISK REGISTER

This Page Intentionally Left Blank

STATE OF CALIFORNIA • DEPARTMENT OF TRANSPORTATION

RISK REGISTER CERTIFICATION (ACCOUNTABILITY CHECKPOINTS) FORM

PPM-0001 (REV 07/2013)

The risk register is to be approved and signed-off by the District Deputies* listed below for all scalability levels. By signing this form, you are certifying that you have reviewed the risks documented in the register and agree that they have been managed to the extent possible by the PDT.

Project Information ☒ Capital Project ☐ Major Maintenance Project (Check One) Total Estimated Cost: $48,893,000.00

Project ID/District-EA: 01-0F820 / 0116000067

Project Description: Trinidad CAPM

Project Manager (PM): Jen Buck

Project Risk Manager (For Risk Level 3 Projects): _____

☐ No Risk Register Certification Required - - Check box if project is less than $1 million in total cost and risk register not prepared. Sign below and submit this form with PID, PA&ED, PS&E submittal, and RE Handoff File (as applicable).

Project Manager Signature: _____ Date: 06/17/2019

PID (Recommended for Capital Projects Only excluding Minor Projects)

Project Manager		Date:
Deputy District Director, Planning		Date:
Deputy District Director*, Design**		Date:
Deputy District Director, Project Management		Date:

PA&ED (Required for Capital Projects Only)

Project Manager		Date: 6/17/2019
Deputy District Director*, Environmental		Date: 06/17/19
Deputy District Director*, Design**	Steven R. Hughes	Date: 06/17/19
Deputy District Director, Project Management		Date: 6/19/19

Prior to PS&E (Required for Capital Projects and Major Maintenance Projects)

Project Manager		Date:
Deputy District Director*, Design**		Date:
Deputy District Director*, Construction		Date:
Deputy District Director*, Right of Way		Date:
Deputy District Director*, Environmental		Date:
Deputy District Director, Project Management**		Date:

RE File Hand-off (Recommended for Capital Projects and Major Maintenance Projects)

Project Manager		Date:
Deputy District Director*, Design**		Date:
Deputy District Director*, Construction		Date:
Deputy District Director, Project Management**		Date:

*or the respective Project Delivery Division Chief signatures in the North Region or Central Region

**or Deputy District Director, Maintenance signature for HM Projects designed by the District Maintenance Division

This Page Intentionally Left Blank

Risk Register for 01-0F820, Trinidad CAPM

Form v3.3 last modified 10/29/2018 CB

Risk Checkpoint:	PA&ED
Date:	6/10/2019
Project Nickname:	Trinidad CAPM
EA:	01-0F820
Co-Rt, Post Miles:	01-HUM-101-R90.1/109.6
Project Manager:	Jen Buck
FY & Program (SHOPP or STIP):	2018 (SHOPP)
Capital Costs:	$45,384k
Support Costs:	$5,770k
Total Costs:	$51,154k
RTL Target:	11/15/2020

Phase	Cost Contingency Range $k			Schedule Contingency Range (Wkg Days)		
	Optimistic	PERT	Pessimistic	Optimistic	PERT	Pessimistic
0-PA&ED	$0	$0	$0	0	0	0
1-PS&E	$0	$0	$0	0	0	0
2-RW Sup	$0	$0	$0	0	0	0
3-Con Sup	$0	$0	$0	0	0	0
9-RW Cap	$0	$0	$0	0	0	0
4-Con Cap	$0	$0	$0	0	0	0

Risk Identification								Risk Assessment										
Status	ID #	Type	Category	Title	Risk Statement	Current status / assumptions	Risk Trigger	Probability (P)	Cost Impact Schedule Impact (I)									
Active	1	Threat	Environmental	Cultural Resources	As a result of archeological surveys indicating the presence of cultural resources, design changes or additional mitigations would be required, which could lead to cost increases and schedule delays.	Preliminary surveys have identified 11 cultural resouces that have the potential to be impacted by the project, including one sacred site within the project limits with current location unknown.	Work proposed within the limits of the sacred site.	3-Moderate (31-50%)			Avoid	Continue communication with Tribes and incorporate avoidance measures into design plans.	Environmental	6/10/2019				
Active	2	Threat	Environmental	Noise Restrictions	Several sensitive species and several critical habitats have been identified within the project limits. Programmatic Agreement with the USFWS will be used as informal consultation. If noise from construction activities cannot be maintained as outlined in the Programmatic Letter of Concurrence, construction delays may occur which would increase cost and schedule.	Construction activities will be scheduled with the identified work windows and noise restrictions.	The PLOC requires noise restrictions of less than 90 dBs until July 9th and less than 20 dBs above ambient until July 31st of each year. Cold planing activities have the potential to exceed 90 dBs.	2-Low (11-30%)			Accept	Schedule cold planing activities after July, or monitor for noise during construction.	Construction	5/1/2017				
Active	3	Threat	Construction	Paving Prices	As a result of SB1 transportation funding, the number of paving projects statewide may increase, which would lead to in increase in unit prices for Rubberized Hot Mix Asphalt.	The current cost estimate is based on recent paving contracts and will be reviewed as final design develops.	Many construction contracts statewide administered with significant asphalt quantities.	3-Moderate (31-50%)			Mitigate	The project team will evaluate the plans, specifications, and estimate once bids for the contract are open.	PM	6/10/2019	4-Con Cap			
Active	4	Threat	Construction	Smoothness Specification	As a result of the department's new specification for pavement smoothness, a pay adjustment is included as an NSSP based on the final smoothness of the pavement surface. The resulting smoothness could affect the final contract amount.	Inertial profiling will be requested within six months of RTL.	Final pavement smoothness as an incentive/disincentive for the contractor.	2-Low (11-30%)			Mitigate	The estimate will be reviewed with a line item for inertial profile correction based on similar other contracts recently awarded.	Construction	6/10/2019	3-Con Sup 4-Con Cap			
Active	5	Threat	Design	Drainage Features	As a result of many overside drains and drainage inlets within the project limits, unanticipated improvements to drainage systems could become apparent during construction that could increase the contract cost and time. This would increase construction capital and support costs.	Current assumptions are that four overside drains are included in the scope of work.	The need to include additional drainage features into the scope of work.	3-Moderate (31-50%)	4 - Moderate (1-3 months)	12	Mitigate	Construction will coordinate with the contractor, Hydraulics, and Environmental to address any additional drainage issues that occur.	Construction	6/10/2019	3-Con Sup 4-Con Cap			

This Page Intentionally Left Blank

Attachment S
FIELD VISIT ROSTER

This Page Intentionally Left Blank

01-HUM-101-PM 90.1/109.6
01-0F820 – 01 1600 0067 – (PPNO 2439)
201.121 – Pavement Preservation (CAPM)

DATE OF MEETING: 2/13/19

01-0F820, Trinidad CAPM
FIELD REVIEW
ATTENDANCE ROSTER

NAME	UNIT
Cassie Nichols	0289
Quentin Pecota	E2 0312
Alison Shipp	E2 0312
KEITH WITTE	SAFETY
David Morgan	"
Ali Thiel	0281 - env
Eduardo Simonsen	Dokken Engineering
Jennifer Langford	Dokken Engineering

This Page Intentionally Left Blank

Attachment T
PERFORMANCE REPORT

This Page Intentionally Left Blank

SHOPP Project - Accomplishment - Performance Measures - Benefits

District: 01 **Tool ID:** 17275 **Project ID:** 0116000067 **EA:** 0F820 **Co-Rte-PM:** HUM-101-R90.1/109.6 (Primary Location)

Res In PID WP: 12/01/15 **Project Manager:** David Melendrez

Save to Excel

☐ Bridge ☑ Pavement ☐ Drainage ☐ Facilities ☐ Safety ☐ Mobility ☐ Roadside ☑ Complete Streets ☐ Sustainability /Climate Change ☐ Advance Mitigation ☐ Major Damage ☑ Green-house Gases ☐ Relinquishment

Performance & Accomplishments (PPC)

	Activity Detail	Performance Objective	Unit of Measurement	Quantity	Assets in Good Cond	Assets in Fair Cond	Assets in Poor Cond	New Asset Added	Comment
1	Mainline existing Asphalt CAPM (e.g. 2" thin overlay (w or w/o wearing surface, cold in place, digouts, etc) (201.121)	Pavement Class I	Lane Miles	76.919	14.012	62.907			SHOPP Eff = 33.25%
2	Existing Ramps & Connectors (201.121, .122, .120)	No Performance Objective in the SHSMP	Lane Miles	1.0		1.0			
3	Existing Shoulders (201.121, .122, .120)	No Performance Objective in the SHSMP	SF	1.0		1.0			
4	Class III Bike Routes (201.999)	No Performance Objective in the SHSMP	Linear Miles	39.0		39.0			Paving CL III Route
5	Is any location within the project limits Ped/Bike accessible?	No Performance Objective in the SHSMP	Yes/No						Yes
6	Quantitative - Proposed Mitigated	No Performance Objective in the SHSMP	MTCO2e	305.0					
7	Quantitative - Unmitigated	No Performance Objective in the SHSMP	MTCO2e	622.0					

This Page Intentionally Left Blank

Attachment U

PARK AND RIDES
& REST AREAS
OVERLAY LIMIT

This Page Intentionally Left Blank

Dist	COUNTY	ROUTE	POST MILES TOTAL PROJECT	SHEET No.	TOTAL SHEETS
01	HUM	101	R90.1/109.6		

FOR DESIGN STUDY ONLY

REGISTERED CIVIL ENGINEER DATE

PLANS APPROVAL DATE

REGISTERED PROFESSIONAL ENGINEER No. Exp. CIVIL STATE OF CALIFORNIA

THE STATE OF CALIFORNIA OR ITS OFFICERS OR AGENTS SHALL NOT BE RESPONSIBLE FOR THE ACCURACY OR COMPLETENESS OF SCANNED COPIES OF THIS PLAN SHEET.

Dokken Engineering
110 Blue Ravine Road
Suite 200
Folsom, CA 95630

NOTE:

FOR ACCURATE RIGHT OF WAY DATA, CONTACT RIGHT OF WAY ENGINEERING AT THE DISTRICT OFFICE.

LEGEND:

OVERLAY LIMIT

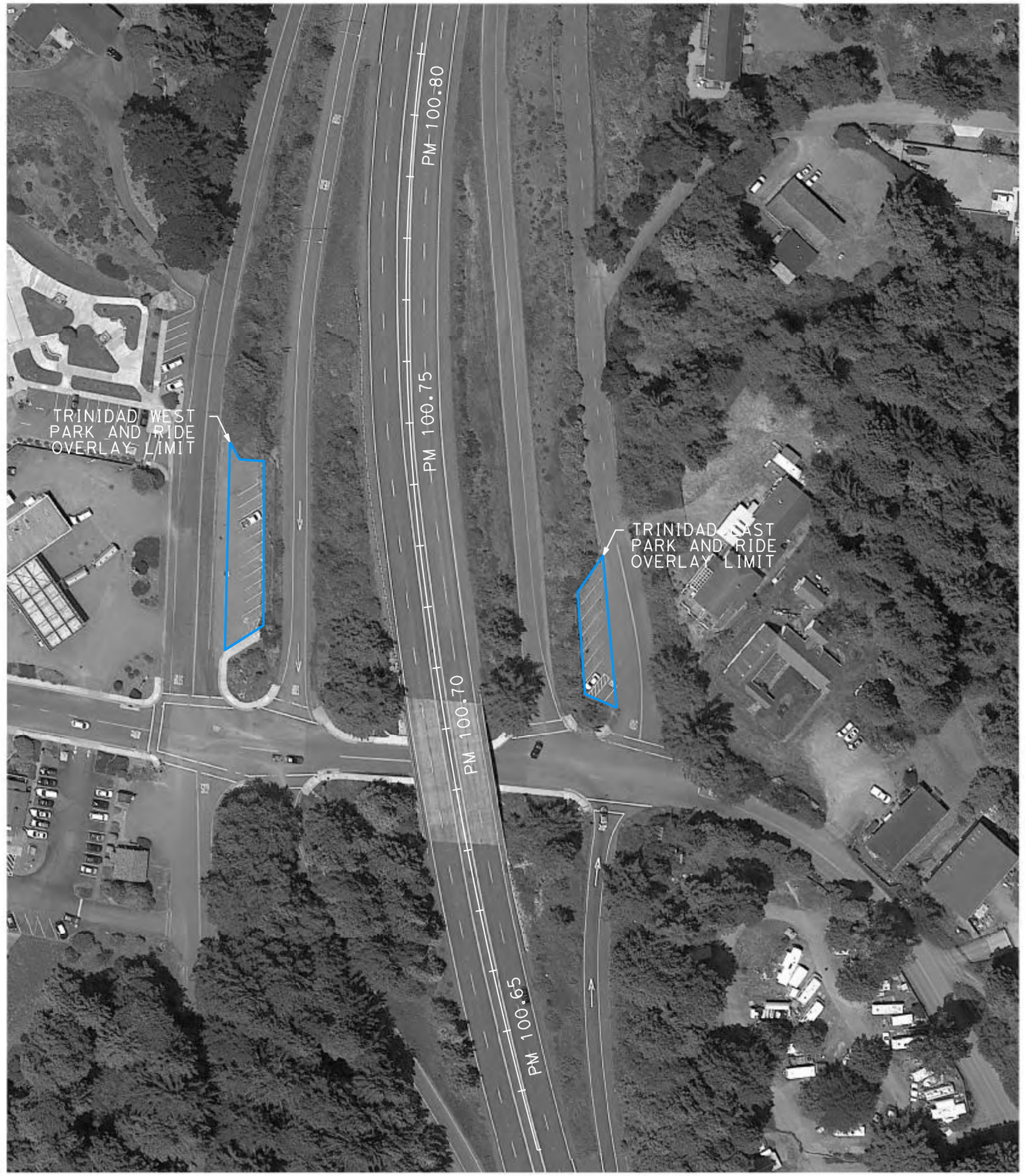

OVERLAY LIMIT

NO SCALE

STATE OF CALIFORNIA - DEPARTMENT OF TRANSPORTATION

Caltrans

CONSULTANT FUNCTIONAL SUPERVISOR

CALCULATED-DESIGNED BY

CHECKED BY

REVISED BY

DATE REVISED

LAST REVISION 00-00-00

DATE PLOTTED => $DATE

TIME PLOTTED => $TIME

This Page Intentionally Left Blank

Dist	COUNTY	ROUTE	POST MILES TOTAL PROJECT	SHEET No.	TOTAL SHEETS
01	HUM	101	R90.1/109.6		

FOR DESIGN STUDY ONLY

REGISTERED CIVIL ENGINEER DATE

PLANS APPROVAL DATE

REGISTERED PROFESSIONAL ENGINEER No. Exp. CIVIL STATE OF CALIFORNIA

THE STATE OF CALIFORNIA OR ITS OFFICERS OR AGENTS SHALL NOT BE RESPONSIBLE FOR THE ACCURACY OR COMPLETENESS OF SCANNED COPIES OF THIS PLAN SHEET.

Dokken Engineering
110 Blue Ravine Road
Suite 200
Folsom, CA 95630

NOTE:

FOR ACCURATE RIGHT OF WAY DATA, CONTACT RIGHT OF WAY ENGINEERING AT THE DISTRICT OFFICE.

LEGEND:

OVERLAY LIMIT

OVERLAY LIMIT

NO SCALE

REVISED BY	DATE REVISED

CALCULATED-DESIGNED BY	CHECKED BY

CONSULTANT FUNCTIONAL SUPERVISOR

STATE OF CALIFORNIA - DEPARTMENT OF TRANSPORTATION

Caltrans

This Page Intentionally Left Blank

Dist	COUNTY	ROUTE	POST MILES TOTAL PROJECT	SHEET No.	TOTAL SHEETS
01	HUM	101	R90.1/109.6		

FOR DESIGN STUDY ONLY

REGISTERED CIVIL ENGINEER DATE

PLANS APPROVAL DATE

REGISTERED PROFESSIONAL ENGINEER No. Exp. CIVIL STATE OF CALIFORNIA

THE STATE OF CALIFORNIA OR ITS OFFICERS OR AGENTS SHALL NOT BE RESPONSIBLE FOR THE ACCURACY OR COMPLETENESS OF SCANNED COPIES OF THIS PLAN SHEET.

Dokken Engineering
110 Blue Ravine Road
Suite 200
Folsom, CA 95630

NOTE:

FOR ACCURATE RIGHT OF WAY DATA, CONTACT RIGHT OF WAY ENGINEERING AT THE DISTRICT OFFICE.

LEGEND:

OVERLAY LIMIT

OVERLAY LIMIT

NO SCALE

STATE OF CALIFORNIA - DEPARTMENT OF TRANSPORTATION

Caltrans

CONSULTANT FUNCTIONAL SUPERVISOR

CALCULATED-DESIGNED BY

CHECKED BY

REVISED BY

DATE REVISED

LAST REVISION 00-00-00

DATE PLOTTED => $DATE

TIME PLOTTED => $TIME

This Page Intentionally Left Blank